Product data sheet
Characteristics

ATV71HC25N4D
variable speed drive ATV71 - 220kW-350HP - 480V - EMC filter-graphic terminal

Product availability : Stock - Normally stocked in distribution facility

Price* : 26105.62 USD

Main

Range of product	Altivar 71
Product or component type	Variable speed drive
Product specific application	Complex, high-power machines
Component name	ATV71
Motor power kW	220 kWat 380...480 V 3 phases 250 kWat 380...480 V 3 phases
Motor power hp	350 hpat 380...480 V 3 phases 400 hpat 380...480 V 3 phases
Motor cable length	<= 328.08 ft (100 m) Shielded cable <= 656.17 ft (200 m) Unshielded cable
[Us] rated supply voltage	380...480 V (- 15...10 %)
Phase	3 phases
Line current	320 Afor 480 V 3 phases 220 kW / 350 hp 357 Afor 480 V 3 phases 250 kW / 400 hp 396 Afor 380 V 3 phases 220 kW / 350 hp 444 Afor 380 V 3 phases 250 kW / 400 hp
EMC filter	Integrated
Assembly style	With heat sink
Variant	Reinforced version Without DC choke
Apparent power	260.6 kVAat 380 V 3 phases 220 kW / 350 hp 292.2 kVAat 380 V 3 phases 250 kW / 400 hp
Prospective line Isc	<= 50 kA, 3 phases
Nominal output current	427 Aat 2.5 kHz 380 V 3 phases 220 kW / 350 hp 427 Aat 2.5 kHz 460 V 3 phases 220 kW / 350 hp 481 Aat 2.5 kHz 380 V 3 phases 250 kW / 400 hp 481 Aat 2.5 kHz 460 V 3 phases 250 kW / 400 hp
Maximum transient current	640 Afor 60 s 3 phases 220 kW / 350 hp 704 Afor 2 s 3 phases 220 kW / 350 hp 721 Afor 60 s 3 phases 250 kW / 400 hp

	793 Afor 2 s 3 phases 250 kW / 400 hp
Output frequency	0.1...500 Hz
Nominal switching frequency	2.5 kHz
Switching frequency	2.5...8 kHz adjustable 2.5...8 kHz with derating factor
Asynchronous motor control profile	Flux vector control (FVC) with sensor (current vector) Voltage/Frequency ratio (2 or 5 points) Sensorless flux vector control (SFVC) (voltage or current vector) ENA (Energy adaptation) system for unbalanced loads
Type of polarization	No impedance Modbus

Complementary

Product destination	Asynchronous motors Synchronous motors
Supply voltage limits	323...528 V
Supply frequency	50...60 Hz (- 5...5 %)
Network frequency	47.5...63 Hz
Speed range	1...100 asynchronous motor in open-loop mode, without speed feedback 1...50 synchronous motor in open-loop mode, without speed feedback 1...1000 asynchronous motor in closed-loop mode with encoder feedback
Speed accuracy	+/- 0.01 % of nominal speed 0.2 Tn to Tn torque variation in closed-loop mode with encoder feedback +/- 10 % of nominal slip 0.2 Tn to Tn torque variation without speed feedback
Torque accuracy	+/- 15 % in open-loop mode, without speed feedback +/- 5 % in closed-loop mode with encoder feedback
Transient overtorque	220 % of nominal motor torque +/- 10 %for 2 s 170 % of nominal motor torque +/- 10 %for 60 s every 10 minutes
Braking torque	<= 150 % with braking or hoist resistor 30 % without braking resistor
Synchronous motor control profile	Vector control without speed feedback
Regulation loop	Adjustable PI regulator
Motor slip compensation	Automatic whatever the load Suppressable Not available in voltage/frequency ratio (2 or 5 points) Adjustable
Local signalling	1 LED red presence of drive voltage
Output voltage	<= power supply voltage
Insulation	Electrical between power and control
Type of cable	With a NEMA Type1 kit: 3-strand UL 508 cableat 104 °F (40 °C), copper 75 °C PVC With an IP21 or an IP31 kit: 3-strand IEC cableat 104 °F (40 °C), copper 70 °C PVC Without mounting kit: 1-strand IEC cableat 113 °F (45 °C), copper 70 °C PVC Without mounting kit: 1-strand IEC cableat 113 °F (45 °C), copper 90 °C XLPE/EPR
Electrical connection	AI1-/AI1+, AI2, AO1, R1A, R1B, R1C, R2A, R2B, LI1...LI6, PWR terminal 2.5 mm² / AWG 14 L1/R, L2/S, L3/T, U/T1, V/T2, W/T3 terminal 4 x 185 mm² PC/-, PO, PA/+ terminal 4 x 185 mm²
Tightening torque	L1/R, L2/S, L3/T, U/T1, V/T2, W/T3 362.83 lbf.in (41 N.m) / 360 lb.in PC/-, PO, PA/+ 362.83 lbf.in (41 N.m) / 360 lb.in AI1-/AI1+, AI2, AO1, R1A, R1B, R1C, R2A, R2B, LI1...LI6, PWR 5.31 lbf.in (0.6 N.m)
Supply	Internal supply for reference potentiometer (1 to 10 kOhm), 10.5 V DC +/- 5 %, <= 10 mAfor overload and short-circuit protection Internal supply, 24 V DC, voltage limits 21...27 V, <= 200 mAfor overload and short-circuit protection
Analogue input number	2
Analogue input type	AI1-/AI1+ bipolar differential voltage +/- 10 V DC, input voltage 24 V max, resolution 11 bits + sign AI2 software-configurable current 0...20 mA, impedance 242 Ohm, resolution 11 bits AI2 software-configurable voltage 0...10 V DC, input voltage 24 V max, impedance 30000 Ohm, resolution 11 bits
Sampling duration	AI1-/AI1+ 2 ms, +/- 0.5 ms analog input(s) AI2 2 ms, +/- 0.5 ms analog input(s) LI1...LI5 2 ms, +/- 0.5 ms discrete input(s) LI6 (if configured as logic input) 2 ms, +/- 0.5 ms discrete input(s)
Response time	<= 100 ms in STO (Safe Torque Off) AO1 2 ms, tolerance +/- 0.5 ms analog output(s) R1A, R1B, R1C 7 ms, tolerance +/- 0.5 ms discrete output(s)

	R2A, R2B 7 ms, tolerance +/- 0.5 ms discrete output(s)
Accuracy	AI1-/AI1+ +/- 0.6 % for a temperature variation 60 °C AI2 +/- 0.6 % for a temperature variation 60 °C AO1 +/- 1 % for a temperature variation 60 °C
Linearity error	AI1-/AI1+, AI2 +/- 0.15 % of maximum value AO1 +/- 0.2 %
Analogue output number	1
Analogue output type	AO1 software-configurable current 0...20 mA, impedance 500 Ohm, resolution 10 bits AO1 software-configurable logic output 10 V <= 20 mA AO1 software-configurable voltage 0...10 V DC, impedance 470 Ohm, resolution 10 bits
Discrete output number	2
Discrete output type	R1A, R1B, R1C configurable relay logic NO/NC, electrical durability 100000 cycles R2A, R2B configurable relay logic NO, electrical durability 100000 cycles
Minimum switching current	Configurable relay logic 3 mAat 24 V DC
Maximum switching current	R1, R2 on resistive load, 5 Aat 250 V AC, cos phi = 1, R1, R2 on resistive load, 5 Aat 30 V DC, cos phi = 1, R1, R2 on inductive load, 2 Aat 250 V AC, cos phi = 0.4, R1, R2 on inductive load, 2 Aat 30 V DC, cos phi = 0.4,
Discrete input number	7
Discrete input type	LI6: switch-configurable 24 V DC with level 1 PLC, impedance: 3500 Ohm PWR: safety input 24 V DC, impedance: 1500 Ohm conforming to ISO 13849-1 level d LI1...LI5: programmable 24 V DC with level 1 PLC, impedance: 3500 Ohm LI6: switch-configurable PTC probe 0...6, impedance: 1500 Ohm
Discrete input logic	LI1...LI5 positive logic (source), < 5 V (state 0), > 11 V (state 0) LI1...LI5 negative logic (sink), > 16 V (state 0), < 10 V (state 0) LI6 (if configured as logic input) positive logic (source), < 5 V (state 0), > 11 V (state 0) LI6 (if configured as logic input) negative logic (sink), > 16 V (state 0), < 10 V (state 0)
Acceleration and deceleration ramps	Linear adjustable separately from 0.01 to 9000 s S, U or customized Automatic adaptation of ramp if braking capacity exceeded, by using resistor
Braking to standstill	By DC injection
Protection type	Drive against exceeding limit speed Drive against input phase loss Drive break on the control circuit Drive input phase breaks Drive line supply overvoltage Drive line supply undervoltage Drive overcurrent between output phases and earth Drive overheating protection Drive overvoltages on the DC bus Drive short-circuit between motor phases Drive thermal protection Motor motor phase break Motor power removal Motor thermal protection
Insulation resistance	> 1 mOhm at 500 V DC for 1 minute to earth
Frequency resolution	Analog input 0.024/50 Hz Display unit 0.1 Hz
Communication port protocol	CANopen Modbus
Connector type	1 RJ45 Modbus on front face 1 RJ45 Modbus on terminal Male SUB-D 9 on RJ45 CANopen
Physical interface	2-wire RS 485 Modbus
Transmission frame	RTU Modbus
Transmission rate	20 kbps, 50 kbps, 125 kbps, 250 kbps, 500 kbps, 1 Mbps CANopen 4800 bps, 9600 bps, 19200 bps, 38.4 Kbps Modbus on terminal 9600 bps, 19200 bps Modbus on front face
Data format	8 bits, 1 stop, even parity Modbus on front face 8 bits, odd even or no configurable parity Modbus on terminal
Number of addresses	1...247 Modbus 1...127 CANopen
Method of access	Slave CANopen
Marking	CE

Operating position	Vertical +/- 10 degree
Height	46.85 in (1190 mm)
Depth	14.84 in (377 mm)
Width	23.43 in (595 mm)
Product weight	308.65 lb(US) (140 kg)
Option card	CC-Link communication card Controller inside programmable card DeviceNet communication card Ethernet/IP communication card Fipio communication card I/O extension card Interbus-S communication card Interface card for encoder Modbus Plus communication card Modbus TCP communication card Modbus/Uni-Telway communication card Overhead crane card Profibus DP communication card Profibus DP V1 communication card

Environment

Noise level	77 dB conforming to 86/188/EEC
Dielectric strength	3535 V DC between earth and power terminals 5092 V DC between control and power terminals
Electromagnetic compatibility	Conducted radio-frequency immunity test conforming to IEC 61000-4-6 level 3 Electrical fast transient/burst immunity test conforming to IEC 61000-4-4 level 4 Electrostatic discharge immunity test conforming to IEC 61000-4-2 level 3 Radiated radio-frequency electromagnetic field immunity test conforming to IEC 61000-4-3 level 3 Voltage dips and interruptions immunity test conforming to IEC 61000-4-11 1.2/50 µs - 8/20 µs surge immunity test conforming to IEC 61000-4-5 level 3
Standards	EN/IEC 61800-5-1 EN/IEC 61800-3 IEC 60721-3-3 class 3C2 UL Type 1 EN 61800-3 environments 2 category C3 EN 55011 class A group 2 EN 61800-3 environments 1 category C3
Product certifications	GOST UL C-Tick CSA NOM 117
Pollution degree	2 conforming to EN/IEC 61800-5-1 3 conforming to UL 840
IP degree of protection	IP00 conforming to EN/IEC 60529 IP00 conforming to EN/IEC 61800-5-1 IP30 on side parts conforming to EN/IEC 60529 IP30 on side parts conforming to EN/IEC 61800-5-1 IP30 on the front panel conforming to EN/IEC 60529 IP30 on the front panel conforming to EN/IEC 61800-5-1 IP41 on upper part conforming to EN/IEC 60529 IP41 on upper part conforming to EN/IEC 61800-5-1 IP54 on lower part conforming to EN/IEC 60529 IP54 on lower part conforming to EN/IEC 61800-5-1
Vibration resistance	1.5 mm peak to peak (f = 3...10 Hz) conforming to EN/IEC 60068-2-6 0.6 gn (f = 10...200 Hz) conforming to EN/IEC 60068-2-6
Shock resistance	4 gn 11 ms conforming to EN/IEC 60068-2-27
Relative humidity	5...95 % without condensation conforming to IEC 60068-2-3 5...95 % without dripping water conforming to IEC 60068-2-3
Ambient air temperature for operation	14...122 °F (-10...50 °C) without derating
Ambient air temperature for storage	-13...158 °F (-25...70 °C)
Operating altitude	<= 3280.84 ft (1000 m) without derating 3280.84...9842.52 ft (1000...3000 m) with current derating 1 % per 100 m

Ordering and shipping details

Category	22133 - ATV71 200 THRU 450HP DRIVES
Discount Schedule	CP4C
GTIN	00785901348399
Nbr. of units in pkg.	1
Package weight(Lbs)	308
Returnability	Y
Country of origin	IN

Offer Sustainability

Sustainable offer status	Green Premium product
RoHS (date code: YYWW)	Compliant - since 1002 - Schneider Electric declaration of conformity Schneider Electric declaration of conformity
REACh	Reference contains SVHC above the threshold - Go to CaP for more details Go to CaP for more details
Product environmental profile	Available Product Environmental Profile
Product end of life instructions	Available End of life manual

Contractual warranty

Warranty period	18 months

ATV71HC25N4D

Variable Speed Drives without DC Choke

Dimensions with or without 1 Option Card (1)

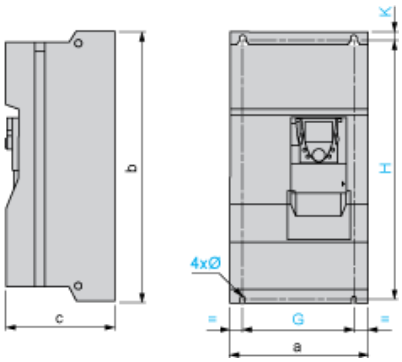

Dimensions in mm

a	b	c	G	H	K	Ø
585	950	377	540	920	15	11.5

Dimensions in in.

a	b	c	G	H	K	Ø
23.03	37.40	14.84	21.26	36.22	0.59	0.45

(1) Option cards: I/O extension cards, communication cards or "Controller Inside" programmable card.

Dimensions with 2 Option Cards (1)

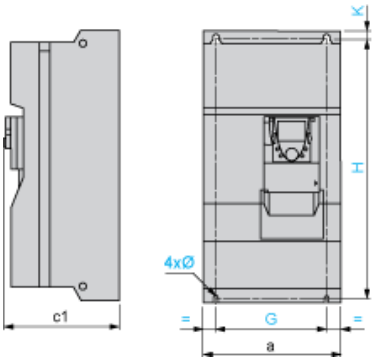

Dimensions in mm

a	c1	G	H	K	Ø
585	392	540	920	15	11.5

Dimensions in in.

a	c1	G	H	K	Ø
23.03	15.43	21.26	36.22	0.59	0.45

(1) Option cards: I/O extension cards, communication cards or "Controller Inside" programmable card.

Drive with Braking Unit VW3A7101

Dimensions with or without 1 Option Card (1)

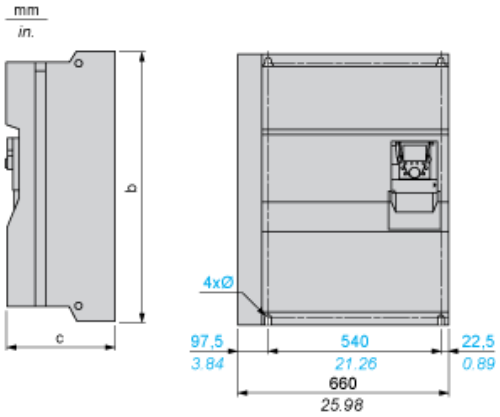

b in mm	c in mm	Ø in mm	b in in.	c in in.	Ø in in.
950	377	11.5	37.40	14.84	0.45

(1) Option cards: I/O extension cards, communication cards or "Controller Inside" programmable card.

Dimensions with 2 Option Cards (1)

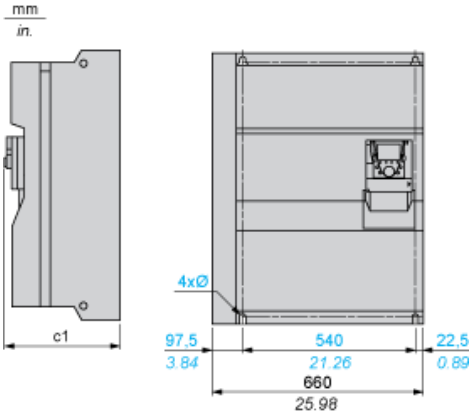

c1 in mm	Ø in mm	c1 in in.	Ø in in.
392	11.5	15.43	0.45

(1) Option cards: I/O extension cards, communication cards or "Controller Inside" programmable card.

Mounting Recommendations

Clearance

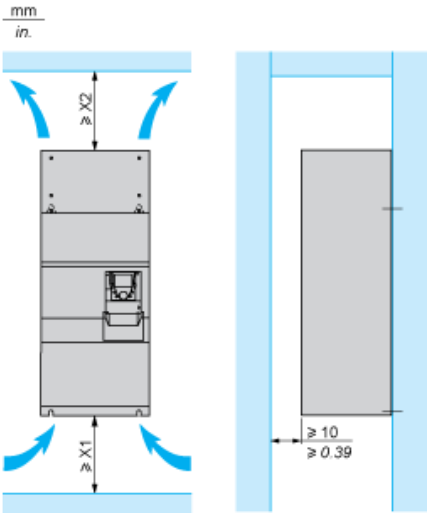

X1 in mm	X2 in mm	X1 in in.	X2 in in.
150	200	5.91	7.87

These drives can be mounted side by side, observing the following mounting recommendations:

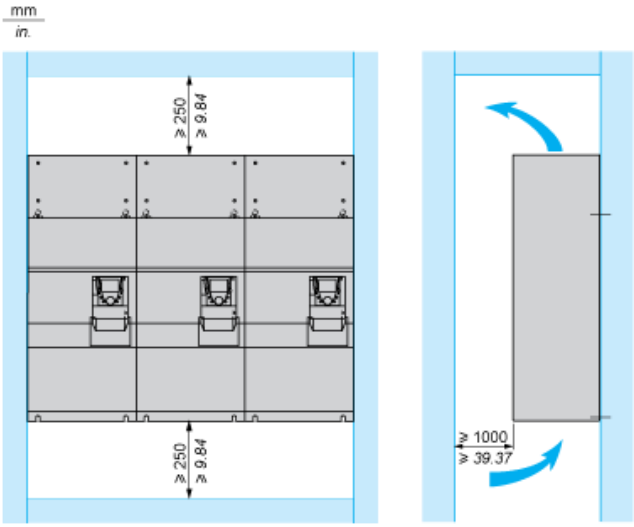

Specific Recommendations for Mounting the Drive in an Enclosure

Ventilation

To ensure proper air circulation in the drive:

- Fit ventilation grilles.
- Ensure that there is sufficient ventilation. If there is not, install a forced ventilation unit with a filter. The openings and/or fans must provide a flow rate at le

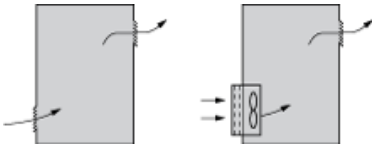

- Use special filters with IP 54 protection.
- Remove the blanking cover from the top of the drive.

Dust and Damp Proof Metal Enclosure (IP 54)

The drive must be mounted in a dust and damp proof enclosure in certain environmental conditions: dust, corrosive gases, high humidity with risk of condensation and dripping water, splashing liquid, etc.

This enables the drive to be used in an enclosure where the maximum internal temperature reaches 50°C.

Wiring Diagram Conforming to Standards EN 954-1 Category 1, IEC/EN 61508 Capacity SIL1, in Stopping Category 0 According to IEC/EN 60204-1

Three-Phase Power Supply with Upstream Breaking via Contactor

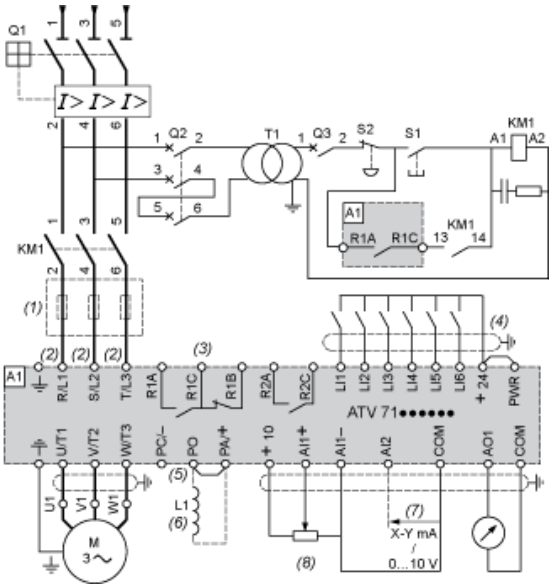

A1 ATV71 drive
KM1 Contactor
L1 DC choke
Q1 Circuit-breaker
Q2 GV2 L rated at twice the nominal primary current of T1
Q3 GB2CB05
S1, S2 XB4 B or XB5 A pushbuttons
T1 100 VA transformer 220 V secondary
(1) Line choke (three-phase); mandatory for ATV71HC11Y…HC63Y drives (except when a special transformer is used (12-pulse)).
(2) For ATV71HC40N4 drives combined with a 400 kW motor, ATV71HC50N4 and ATV71HC40Y…HC63Y, refer to the power terminal connections diagram.
(3) Fault relay contacts. Used for remote signalling of the drive status.
(4) Connection of the common for the logic inputs depends on the positioning of the SW1 switch. The above diagram shows the internal power supply switched
(5) There is no PO terminal on ATV71HC11Y…HC63Y drives.
(6) Optional DC choke for ATV71H•••M3, ATV71HD11M3X…HD45M3X, ATV71•075N4…•D75N4 and ATV71P•••N4Z drives. Connected in place of the strap b
(7) Software-configurable current (0…20 mA) or voltage (0…10 V) analog input.
(8) Reference potentiometer.

All terminals are located at the bottom of the drive. Fit interference suppressors on all inductive circuits near the drive or connected on the same circuit, such as relays, contactors, solenoid valves, fluorescent lighting, etc.

Wiring Diagram Conforming to Standards EN 954-1 Category 1, IEC/EN 61508 Capacity SIL1, in Stopping Category 0 According to IEC/EN 60204-1

Three-Phase Power Supply with Downstream Breaking via Switch Disconnector

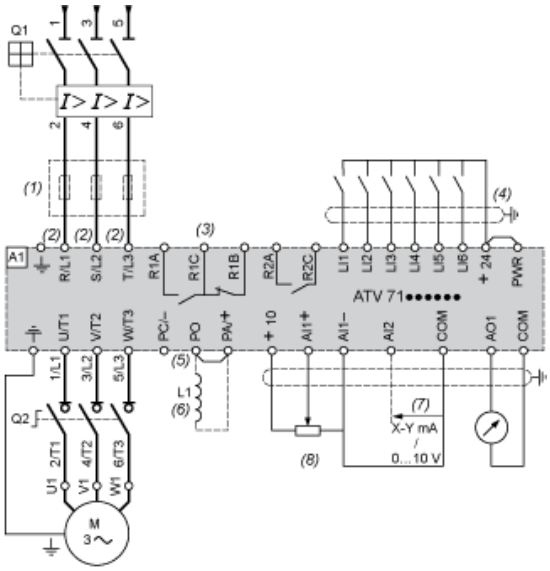

A1 ATV71 drive
L1 DC choke
Q1 Circuit-breaker
Q2 Switch disconnector (Vario)
(1) Line choke (three-phase), mandatory for ATV71HC11Y…HC63Y drives (except when a special transformer is used (12-pulse)).
(2) For ATV71HC40N4 drives combined with a 400 kW motor, ATV71HC50N4 and ATV71HC40Y…HC63Y, refer to the power terminal connections diagram
(3) Fault relay contacts. Used for remote signalling of the drive status.
(4) Connection of the common for the logic inputs depends on the positioning of the SW1 switch. The above diagram shows the internal power supply switch
(5) There is no PO terminal on ATV71HC11Y…HC63Y drives.
(6) Optional DC choke for ATV71H•••M3, ATV71HD11M3X…HD45M3X, ATV71•075N4…•D75N4 and ATV71P•••N4Z drives. Connected in place of the strap
(7) Software-configurable current (0…20 mA) or voltage (0…10 V) analog input.
(8) Reference potentiometer.

All terminals are located at the bottom of the drive. Fit interference suppressors on all inductive circuits near the drive or connected on the same circuit, such as relays, contactors, solenoid valves, fluorescent lighting, etc.

Wiring Diagram Conforming to Standards EN 954-1 Category 3, IEC/EN 61508 Capacity SIL2, in Stopping Category 0 According to IEC/EN 60204-1

Three-Phase Power Supply, Low Inertia Machine, Vertical Movement

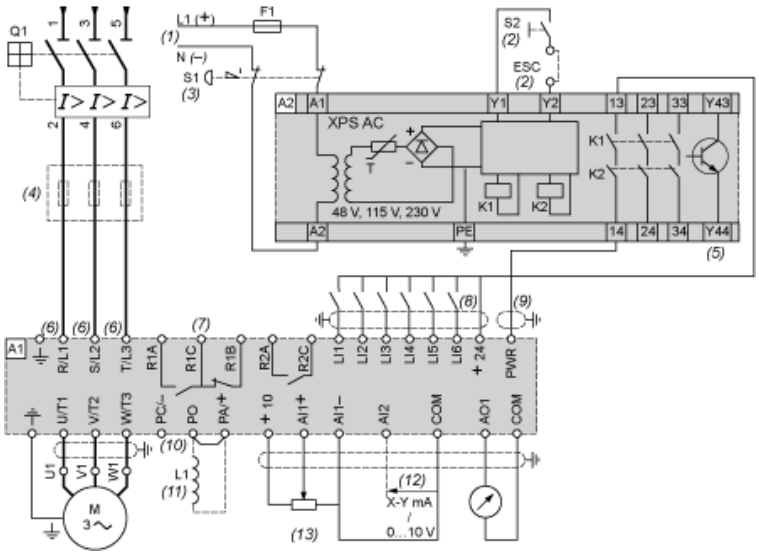

A1 ATV71 drive
A2 Preventa XPS AC safety module for monitoring emergency stops and switches. One safety module can manage the “Power Removal” function for several d
F1 Fuse
L1 DC choke
Q1 Circuit-breaker
S1 Emergency stop button with 2 contacts
S2 XB4 B or XB5 A pushbutton
(1) Power supply: 24 Vdc or Vac, 48 Vac, 115 Vac, 230 Vac.
(2) S2: resets XPS AC module on power-up or after an emergency stop. ESC can be used to set external starting conditions.
(3) Requests freewheel stopping of the movement and activates the “Power Removal” safety function.
(4) Line choke (three-phase), mandatory for and ATV71HC11Y…HC63Y drives (except when a special transformer is used (12-pulse)).
(5) The logic output can be used to signal that the machine is in a safe stop state.
(6) For ATV71HC40N4 drives combined with a 400 kW motor, ATV71HC50N4 and ATV71HC40Y…HC63Y, refer to the power terminal connections diagram.
(7) Fault relay contacts. Used for remote signalling of the drive status.
(8) Connection of the common for the logic inputs depends on the positioning of the SW1 switch. The above diagram shows the internal power supply switched
(9) Standardized coaxial cable, type RG174/U according to MIL-C17 or KX3B according to NF C 93-550, external diameter 2.54 mm /0.09 in., maximum length
(10) There is no PO terminal on ATV71HC11Y…HC63Y drives.
(11) Optional DC choke for ATV71H•••M3, ATV71HD11M3X…HD45M3X, ATV71•075N4…•D75N4 and ATV71P•••N4Z drives. Connected in place of the strap b
(12) Software-configurable current (0…20 mA) or voltage (0…10 V) analog input.
(13) Reference potentiometer.

All terminals are located at the bottom of the drive. Fit interference suppressors on all inductive circuits near the drive or connected on the same circuit, such as relays, contactors, solenoid valves, fluorescent lighting, etc.

Wiring Diagram Conforming to Standards EN 954-1 Category 3, IEC/EN 61508 Capacity SIL2, in Stopping Category 1 According to IEC/EN 60204-1

Three-Phase Power Supply, High Inertia Machine

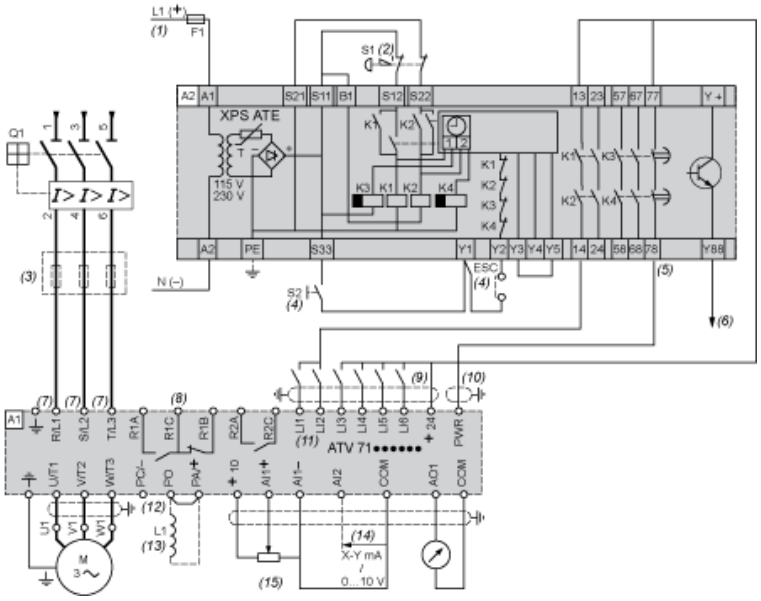

A1 ATV71 drive
A2 (5) Preventa XPS ATE safety module for monitoring emergency stops and switches. One safety module can manage the "Power Removal" safety function fo
F1 Fuse
L1 DC choke
Q1 Circuit-breaker
S1 Emergency stop button with 2 N/C contacts
S2 Run button
(1) Power supply: 24 Vdc or Vac, 115 Vac, 230 Vac.
(2) Requests controlled stopping of the movement and activates the “Power Removal” safety function.
(3) Line choke (three-phase), mandatory for ATV71HC11Y…HC63Y drives (except when a special transformer is used (12-pulse)).
(4) S2: resets XPS ATE module on power-up or after an emergency stop. ESC can be used to set external starting conditions.
(5) For stopping times requiring more than 30 seconds in category 1, use a Preventa XPS AV safety module which can provide a maximum time delay of 30
(6) The logic output can be used to signal that the machine is in a safe state.
(7) For ATV71HC40N4 drives combined with a 400 kW motor, ATV71HC50N4 and ATV71HC40Y…HC63Y, refer to the power terminal connections diagram
(8) Fault relay contacts. Used for remote signalling of the drive status.
(9) Connection of the common for the logic inputs depends on the positioning of the SW1 switch. The above diagram shows the internal power supply switch
(10) Standardized coaxial cable, type RG174/U according to MIL-C17 or KX3B according to NF C 93-550, external diameter 2.54 mm/0.09 in., maximum leng
(11) Logic inputs LI1 and LI2 must be assigned to the direction of rotation: LI1 in the forward direction and LI2 in the reverse direction.
(12) There is no PO terminal on ATV71HC11Y…HC63Y drives.
(13) Optional DC choke for ATV71H•••M3, ATV71HD11M3X…HD45M3X, ATV71•075N4…•D75N4 and ATV71P•••N4Z drives. Connected in place of the strap
(14) Software-configurable current (0…20 mA) or voltage (0…10 V) analog input.
(15) Reference potentiometer.

All terminals are located at the bottom of the drive. Fit interference suppressors on all inductive circuits near the drive or connected on the same circuit, such as relays, contactors, solenoid valves, fluorescent lighting, etc.

ATV71HC25N4D

Derating Curves

The derating curves for the drive nominal current (In) depend on the temperature and the switching frequency. For intermediate temperatures (e.g. 55°C), interpolate between 2 curves.

Drive combined with a 220 kW motor

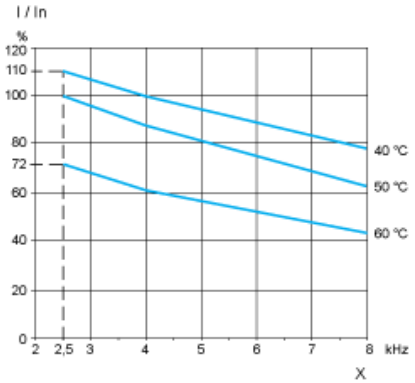

X Switching frequency

Drive combined with a 250 kW motor

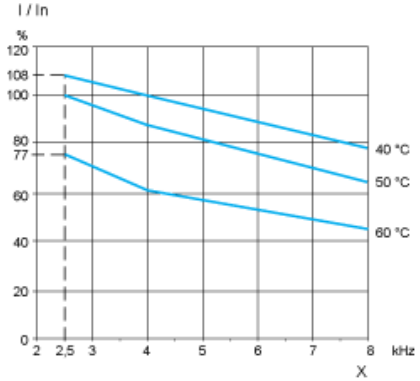

X Switching frequency