# SIEMENS

## SIRIUS Safety Integrated

**Application Manual**

**- S.I.A.M. -**

**Safety relays 3TK28..**

**Safe load feeder 3RA71.**



This documentation supplements the user manuals of safety relays **3TK28..** and safe load feeders **3RA71.**

**Edition 07/2005**

## Note

The Safety Functional Examples are not binding and do not claim to be complete regarding the circuits shown, equipping and any eventuality. The Safety Functional Examples do not represent customer-specific solutions. They are only intended to provide support for typical applications. You are responsible in ensuring that the described products are correctly used. These Safety Functional Examples do not relieve you of the responsibility in safely and professionally using, installing, operating and servicing equipment. When using these Safety Functional Examples, you recognize that Siemens cannot be made liable for any damage/claims beyond the liability clause described above. We reserve the right to make changes to these Safety Functional Examples at any time without prior notice. If there are any deviations between the recommendations provided in these Safety Functional Examples and other Siemens publications - e.g. catalogue - then the contents of the other documents have priority.

Date: 02.2005

Authors: Patrick Gehlen, Dipl. Ing. (TH), A&D CD CC AE
Werner Krämer, Dipl. Ing. (TH), A&D CD CC TE

# General terminology and abbreviations

| | |
|---|---|
| **OUT** | The enable circuit is a safety-relevant output<br>(refer to S, $S_{el}$, $S_{tv}$ and $S_{el\ tv}$). |
| **K1, K2, ...** | Power contactors or<br>positively-driven contacts (according to IEC 60947) of the power contactors for the feedback circuit of the safety relay. |
| **$S_{el}$** | Electronic signaling contact |
| **NC contact** | NC contact with the function of a signaling output. |
| NO contact | NO contact with the function of a safety-relevant output (enable circuit). |
| $NO_{el}$<br>$NO_{tv}$ , $NO_{el\ tv}$ | Safety-related solid-state (semiconductor) output (enable circuit).<br>NO contact that opens with a delay (enable circuit)!<br>This contact is required to implement Stop Category 1 acc. to EN 60204-1. |
| **$V_s$** | The supply or operating voltage of safety relays.<br>Comment: +24V DC is always available in the sensor circuit, independent of **$V_s$**. |
|  | Positively-opening contacts (acc. to IEC 947-5-1).<br>These are contacts that open as a direct result of a defined movement of an operator element of a switch through elements that are not equipped with springs. For the electrical equipment of machinery, it is mandatory that in all of the safety circuits, opening contacts are always positively-driven. |
| manual start | For a manual start, an enable signal is generated when the ON button is pressed. This function is also designated as static operation and is specified for EMERGENCY STOP devices (EN 60204-1, conscious action).<br>***Safety relays with automatic start can be used up to Category 3**:*<br>*The feedback circuit is statically monitored.* |
| monitored start | For a monitored start, an enable signal is generated when the ON button is pressed. This function is also designated as static operation and is specified for EMERGENCY STOP devices (EN 60204-1, conscious action).<br>***Possible with safety relays up to Category 4**:*<br>*The feedback circuit is dynamically monitored.* |
| automatic start | For an **automatic start,** an enable signal is generated without a manual agreement. This function is also designated as dynamic operation and is not permissible for E Stop devices. |
| **cascading (cascading input)** | Safety-relevant single-channel input of a safety relay that is internally evaluated just the same as a sensor signal: Logically AND'ed with other signal encoder inputs. If a voltage is not present, the safety relay safely shuts down the enable circuit (outputs).<br>**Operational switching:** Depending on the particular safety relay, the enable circuits are switched with a monitored or an autostart<br>(refer to the Safety Navigator 3TK28 in the Attachment) |
| categories acc. to EN 954-1 | Categories B, 1, 2, 3 and 4 are described in EN 954-1:1999 (harmonized Standard in the Machinery Directive):<br>The higher the Category, the higher the fault detection. |
| **safe cable routing acc. to EN 60439-1** | Cables with basic insulation may not be routed over sharp edges or should be routed e.g. in steel pipes/ducts (protective Class 2): This is used to exclude faults. |
| stop categories acc. to EN 60204-1 | The Stop Categories represent Stop functions to Stop machinery and equipment in an emergency acc. to IEC 60204-1:<br>0 = instantaneous, 1 = delayed |

# Information on using the brochure

## Symbols that have been used:

Supplementary information

Notes

# General notes

## Note regarding all of the examples of Category 4 acc. to EN 954-1

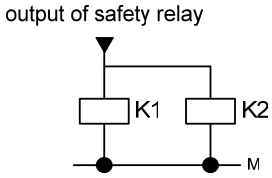


Two (or also several) load contactors for Category 4 acc. to EN 954-1 may be connected to a single enable circuit in a control cabinet
(a short-circuit as fault can be excluded). Also refer to the Attachment.

## Note for all examples of Category 2 acc. to EN 954-1

With this circuit example, Category 2 according to EN 954-1 can only be fulfilled if, when an actuator fails, either an alarm is automatically generated or the machine control initiates a safe condition:
Otherwise a second shutdown path is required.

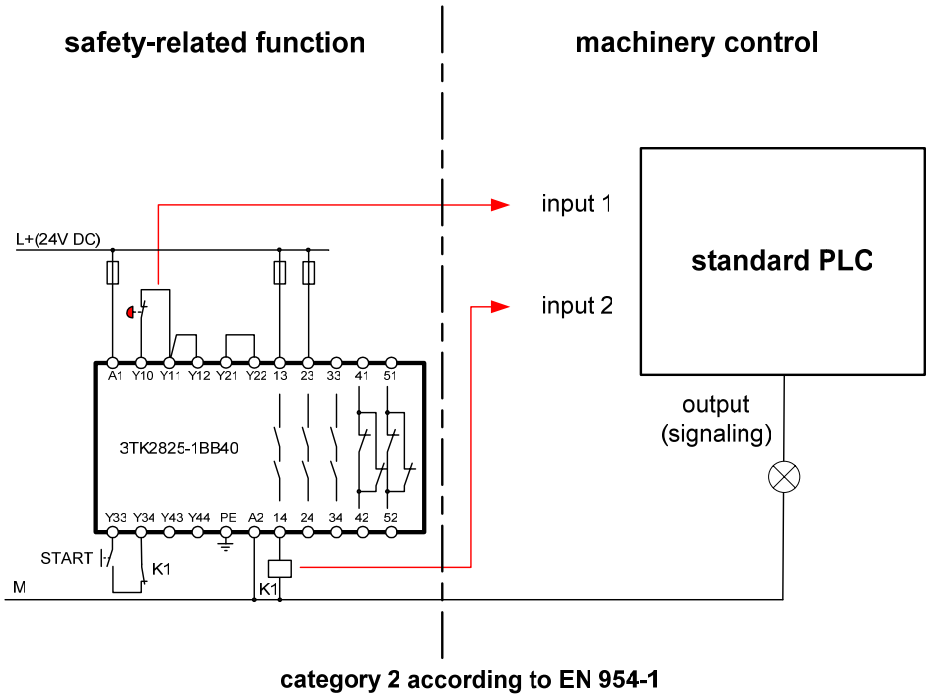


## Note regarding safe separation and cable routing

The objective is to achieve a high degree of operational safety.
In order to protect against parasitic (vagabond) voltages, the different voltages in a cable or piece of equipment must be insulated against the highest voltage present
(protection against electric shock, IEC 61140)
**Measure:**
Do not route cables with basic insulation along sharp edges or route cables, for example, in a steel pipe or duct
(Protective Class 2):
This measure is used to exclude faults (the highest degree of insulation).

# Table of contents

# Table of contents acc. function

## E-Stop Monitoring, Stop-Category 0



## E-Stop Monitoring, Stop-Category 0 and 1

## E-Stop and Protective door Monitoring, Stop-Category 0



## E-Stop and Protective door Monitoring, Stop-Category 0 and 1



## E-Stop and Light grid Monitoring, Stop-Category 0



## E-Stop and Light grid Monitoring, Stop-Category 0 and 1

## Protective door-Monitoring, Stop-Category 0



## Protective door Monitoring, Stop-Category 0 and 1

## Magnet sensor Monitoring, Stop-Category 0



## Light grid Monitoring, Stop-Category 0



## Safety mat Monitoring, Stop-Category 0



## Two hand Monitoring, Stop-Category 0



## Two hand Monitoring with run-on distance check , Stop-Category 0



## Two hand Monitoring and E-STOP Monitoring, Stop-Category 0

# Safety pilot 3TK282. / 3TK283.

| | category EN 954-1 | | | sensors | | | | | | | | stop-category EN 60204-1 | | funtions | | | safety-related OUT | OUT el. | signaling output | supply voltage $V_s$ | | | |
|---|---|---|---|---|---|---|---|---|---|---|---|---|---|---|---|---|---|---|---|---|---|---|---|
| safety relay | 2 | 3 | 4 | E-Stop | protective door | light curtain / grid | magnet sensor | contact mat | two hand | overtravel distance | expansion device | 0 | 1 | cascading | autostart / monitore start | operational switching | | | | 24V DC | 24 V AC | 115V AC | 230 V AC |
| **safety relays with relay output** | | | | | | | | | | | | | | | | | | | | | | | |
| 3TK2821 | x | x | | x | x | | | | | | | x | | | x / - | | 3NO | | 1NC | x | x | | |
| 3TK2822 | | x | x | | x | | | | | | | x | | | x / - | | 2NO | | | x | x | | |
| 3TK2823 | | x | x | x | | | | | | | | x | | | - / x | | 2NO | | | x | x | | |
| 3TK2824 | x | x | | x | x | | | | | | | x | | | x / - | | 2NO | | | x | x | x | x |
| 3TK2825 | x | x | x | x | x | | | | | | | x | | | x / x | | 3NO | | 2NC | x | x | x | x |
| 3TK2827 | x | x | | x | | | | | | | | x | x | | - / x | | 2NO+2NO$t_v$ | | 1NC | x | x | x | x |
| 3TK2828 | x | x | | | x | | | | | | | x | x | | x / - | | 2NO+ 2NO$t_v$ | | 1NC | x | x | x | x |
| 3TK2830 | | | | | | | | | | | x | x | | | | | 4NO | | | x | x | x | x |
| 3TK2834 | | | | | | | | | x | | | | | | | | 2NO | | 2NC | x | x | x | x |
| 3TK2835 | | | | | | | | | | x | | | | | | | 3NO | | 1NC | x | x | | |

el. = safety-related electronic (semiconductor) outpout
OUT = safety-related output (contact, relay)
$t_v$ = timed delayed output (stop-category 1)

NO = normally open contact / output
NC = normally closed

# Safety pilot 3TK284. / 3TK285. / 3RA71.

| | category EN 954-1 | | | sensors | | | | | | | | stop-category EN 60204-1 | | funtions | | | safety-related OUT | OUT el. | signaling output | supply voltage Vs | | | |
|---|---|---|---|---|---|---|---|---|---|---|---|---|---|---|---|---|---|---|---|---|---|---|---|
| safety relay | 2 | 3 | 4 | E-Stop | protective door | light curtain / grid | magnet sensor | contact mat | two hand | overtravel distance | expansion device | 0 | 1 | cascading | autostart / monitore start | operational switching | | | | 24V DC | 24 V AC | 115V AC | 230 V AC |
| **safety relays with electronic (semiconductor) outputs** | | | | | | | | | | | | | | | | | | | | | | | |
| 3TK2840 | x | x | | x | x | x | x | x | | | | x | | | x / x | | | 2 [1] | | x | | | |
| 3TK2841 | x | x | x | x | x | x | x | x | | | | x | | x [3] | x / x | x [3] | | 2 | | x | | | |
| 3TK2842 | x | x | x | x | x | x | x | x | | | | x | x | x [3] | x / x | x [3] | | 1+1 $t_v$ | | x | | | |
| **safety relays with electronic (semiconductor) / relay outputs** | | | | | | | | | | | | | | | | | | | | | | | |
| 3TK2845 | x | x | x | x | x | x | x | x | | | | x | x | x [2] | x / x | x [2] | 2NO | 2 | 1 el. | x | | | |
| **safety relays with auxiliary contacts** | | | | | | | | | | | | | | | | | | | | | | | |
| 3TK2850 | x | x | | x | x | x | x | x | | | | x | | | x / x | | 3NO | | SIRIUS | x | x | x | x |
| 3TK2851 | x | x | | x | x | x | x | x | | | | x | | | x / x | | 2NO | | 1NO SIRIUS | x | x | x | x |
| 3TK2852 | x | x | | x | x | x | x | x | | | | x | | | x / x | | 6NO | | 1NO SIRIUS | x | x | x | x |
| 3TK2853 | x | x | x | x | x | x | x | x | | | | x | | x | x / x | x | 3NO | 1 | SIRIUS | x | | | |
| 3TK2856 | | | | | | | | | | | x | x | | x | | x | 6NO | 1 | 1NO SIRIUS | x | | | |
| 3TK2857 | | | | | | | | | | | x | | x | x | | x | $3NO_{tv}$ | 1 | SIRIUS | x | | | |
| **safe load feeders** | | | | | | | | | | | | | | | | | | | | | | | |
| 3RA710 | x | x | | x | x | x | x | x | | | | x | | | x / x | | 3NO | | SIRIUS | x | x | x | x |
| 3RA711 | x | x | x | x | x | x | x | x | | | | x | | x | x / x | x | 3NO | 1 | SIRIUS | x | | | |
| 3RA712 | | | | | | | | | | | x | x | | x | | x | 3NO | 1 | SIRIUS | x | | | |
| 3RA713/4 | | | | | | | | | | | x | | x | x | | x | $3NO_{tv}$ | 1 | SIRIUS | x | | | |

el. = safety-related electronic (semiconductor) outpout
OUT = safety-related output (contact, relay)
$t_v$ = timed delayed output (stop-category 1)

NO = normally open contact / out
NC = normally closed
SIRIUS = using SIRIUS accessories

1) using of positively-driven actuators is required
2) operational switching is possible by using the cascading input 1
3) operational switching with autostart or monitored start (depending on the selected start function of the safety relay)

# Homologation 3TK28. / 3RA71.

| Device | BG | TÜV | UL | CSA | AOPD EN 61496-1 | DIN VDE 0116 Electrical Equipment of Furnaces | EN 954-1 | IEC 61508 |
|---|---|---|---|---|---|---|---|---|
| 3TK2821 | X | | X | X | | | X | |
| 3TK2822 | X | | X | X | | | X | |
| 3TK2823 | X | | X | X | | | X | |
| 3TK2824 | X | | X | X | | | X | |
| 3TK2825 | X | | X | X | | | X | |
| 3TK2827 | X | | X | X | | | X | |
| 3TK2828 | X | | X | X | | | X | |
| 3TK2830 | X | | X | X | | | X | |
| 3TK2834 | X | | X | X | | | X | |
| 3TK2835 | X | | X | X | | | X | |
| 3TK2840 | | X | X | X | | | X | X |
| 3TK2841 | | X | X | X | X | X | X | X |
| 3TK2842 | | X | X | X | X | X | X | X |
| 3TK2845 | | X | X | X | X | | X | X |
| 3TK2850 | | X | X | X | | | X | X |
| 3TK2851 | | X | X | X | | | X | X |
| 3TK2852 | | X | X | X | | | X | X |
| 3TK2853 | | X | X | X | X | | X | X |
| 3TK2856 | | X | X | X | | | X | X |
| 3TK2857 | | X | X | X | | | X | X |
| 3RA710 | | X | X | X | | | X | X |
| 3RA711 | | X | X | X | X | | X | X |
| 3RA712 | | X | X | X | | | X | X |
| 3RA713/4 | | X | X | X | | | X | X |

# Terminal connections 3TK28

# Safety-relays 3TK282.

| clamp | function | 3TK2821 | 3TK2822 | 3TK2823 | 3TK2824 24V | 3TK2824 115V / 230V | 3TK2825 | 3TK2827 / 28 |
|---|---|---|---|---|---|---|---|---|
| A1 | Power supply L/+ | X | X | X | X | X | X | X |
| A2 | Power supply N/- | X | X | X | X | X | X | X |
| Y1, Y2 | Feedback circuit / ON button between Y1-Y2 | X | | | X | | | |
| Y10 | Sensor circuit 1 one-channel between Y10 – Y11, bridge between Y11 – Y12 and Y21 – Y22 | | | | | | X | X |
| Y11, Y12 | Sensor circuit 1 between Y11 – Y12 | | X[1)] | X[1)] | | X | X[2)] | X[2)] |
| Y21, Y22 | Sensor circuit 2 between Y21 – Y22 | | X[1)] | X[1)] | | X[3)] | X | X |
| Y33, Y34 | Feedback circuit, ON button between Y33 – Y34 | | X | X | | X | X | X |
| Y43, Y44 | Auto start, bridge between Y43 – Y44; monitored start, without bridge. | | | | | | X | |
| | | | | | | | | |
| 13-14<br>23-24<br>33-34 | Enable circuit S: instantaneous | X<br>X<br>X | X<br>X | X<br>X | X<br>X | X<br>X | X<br>X<br>X | X<br>X |
| 47-48<br>57-58 | Enable circuit $S_{tv}$: delayed | | | | | | | X<br>X |
| 31-32<br>41-42<br>51-52 | Signaling contacts Ö | X | | | | | X<br>X | X |

[1)] The safety relay can only be used for two-channel sensors.

**[2)] For tow-channel sensors, bridge between Y10 – Y11**

[3] For one-channel sensors to Y11 – Y12, bridge between Y21 – Y22

# Safety-relays 3TK284. / 3TK285. / 3RA71.

| Clamp | Function | 3TK2840 | 3TK2841 | 3TK2842 | 3TK2850,51,52<br>3RA710* | 3TK2853<br>3RA711* | 3TK2856,57 |
|---|---|---|---|---|---|---|---|
| A1 | Power supply L/+ | X | X | X | X | X | X |
| A2 | Power supply N/- | X | X | X | X | X | X |
| 1 | Cascading input, start with positive voltage | | X | X | | X | X |
| 3 | Operational switching, (+24V supply for sensor „operational switching“) | | | | | X | X |
| 4 | Operational switching, input | | | | | X | X |
| Y11, Y12 | Sensor circuit 1 between Y11 – Y12 | X | X | X | X | X | |
| Y20 | One-channel operation when a jumper to Y21 is inserted | X | | | X | | |
| Y21, Y22 | Sensor circuit 2 between Y21 – Y22 | X | X | X | X | X | |
| Y32 | Auto start when supplied with +24V | | X | X | | X | |
| Y33 | Feedback circuit between Y33 – Y34 for automatic start | X | | | X | | |
| Y33 | Feedback circuit, ON button (+24V supply for feedback circuit, On button) | | | | | X | |
| Y34 | Feedback circuit , ON button Input supplied by +24V | X | X | X | X | X | |
| Y35 | Without cross-circuit fault detection for supply with a positive voltage | | X | X | | X | |
| | | | | | | | |
| 2 | Safety solid-state output | | | | | X | X |
| 14<br>24 | Safety solid-state output<br>Enable circuit $S_{el}$: instantaneous | X<br>X | X<br>X | X | | | |
| 28 | Safety solid-state output<br>Enable circuit $S_{el\ tv}$: delayed | | | X | | | |

# Safety-relays 3TK2845

| Clamp | Function | 3TK2845 |
|---|---|---|
| A1 | Power supply + | X |
| A2 | Power supply - | X |
| 1 | Cascading input (automatic start), start with positive voltage | X |
| Y11 | Sensor 1 circuit 1, output (test signal) | X |
| Y12 | Sensor 1 circuit 1, input monitored start | X |
| Y21 | Sensor 1 circuit 2, output (test signal) | X |
| Y22 | Sensor 1 circuit 2 input monitored start | X |
| Y34 | On button input | X |
| Y35 | Cross-circuit fault detection sensor 1 | X |
| Y41 | Sensor circuit 1, output (test signal) | X |
| Y42 | Sensor 2 circuit 1, input automatic start | X |
| Y51 | Sensor 2 circuit 2, output (test signal) | X |
| Y52 | Sensor 2 circuit 2, input automatic start | X |
| Y64 | Feedback circuit to plus | X |
| Y65 | Cross circuit detection Sensor 2 | X |
| Y72 | Sensor 3 key switch circuit 1, Input | X |
| Y82 | Sensor 3 key switch circuit 2, Input | X |
| | | |
| 13-14<br>37-38 | Enable circuit<br>(S, $S_{tv}$: depending on device type) | X |
| 24<br>48 | Safety solid-state output<br>($S_{el}$, $S_{el\ tv}$: acc. device type) | X |
| 52 | Electronic solid-state signaling output | X |

# 3TK282.
# 3TK283.

# Safety relays with relays outputs


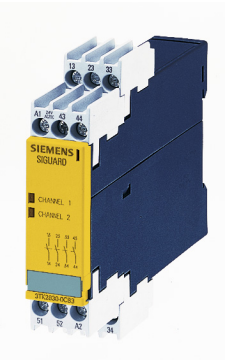



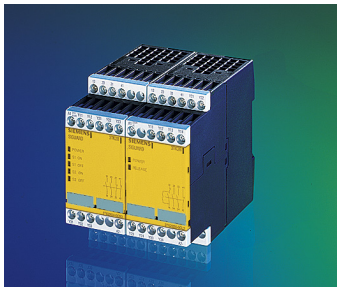

1

## 3TK2821

**Category 2** (acc. EN 954-1)
**E-Stop monitoring**
**Stop-Category 0**

**3NO 1NC**
**$V_s$ 24 V DC**
**manual start**

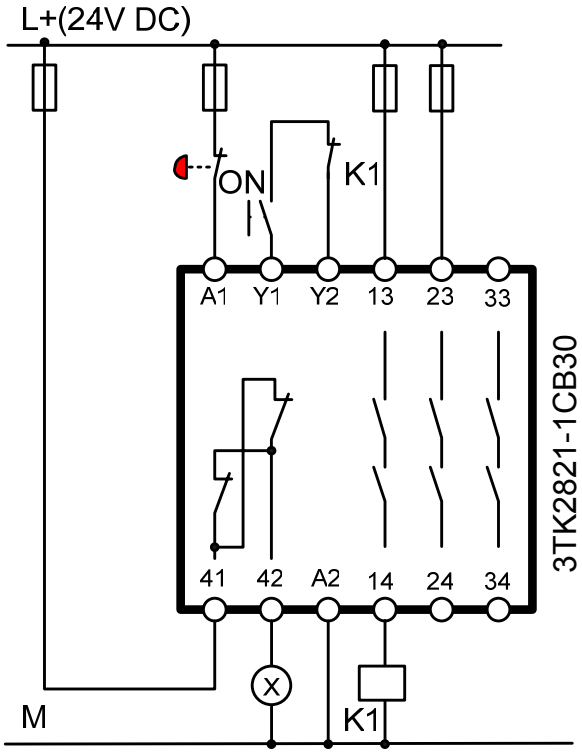


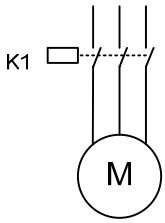


Not all faults are detected in the sensor circuit, e.g. a P fault in the A1 circuit.
The user must ensure that these types of faults do not occur.

Sensor cables must be routed so that they are protected; only safety-relevant sensors with positively opening contacts may be used as sensors.
Using this circuit example, Category 2 according to EN 954-1 can only be fulfilled, if, when the actuator fails, either an alarm is automatically generated or the machine control initiates a safe condition. Otherwise a second shutdown path is required.

| | | |
|---|---|---|
| **3TK2821** | **Category 3** (acc. EN 954-1)<br>**E-Stop monitoring**<br>**Stop-Category 0** | **3NO 1NC**<br>**$V_s$ 24 V DC**<br>**manual start** |



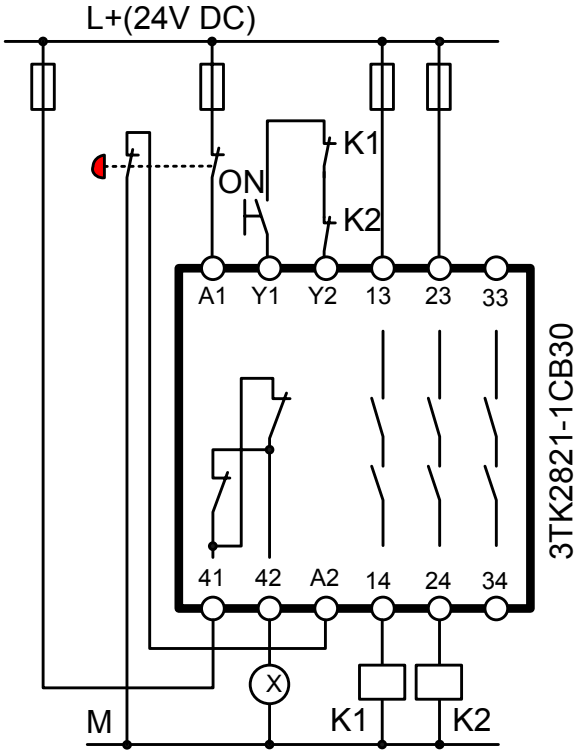


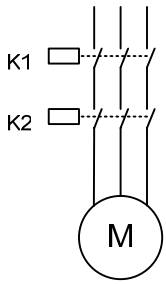


Not all faults are detected in the sensor circuit, e.g. a P fault in the A1 circuit.
The user must ensure that these types of faults do not occur.

Sensor cables must be routed so that they are protected; only safety-relevant sensors with positively-opening contacts may be used as sensors.
Category 4 according to EN 954-1 can be achieved with supplementary measures, e.g. by routing cables in a safety-relevant fashion.

1

| | | |
|---|---|---|
| **3TK2821** | **Category 2** (acc. EN 954-1)<br>**Protective door monitoring**<br>**Stop-Category 0** | **3NO 1NC**<br>**$V_s$ 24 V DC**<br>**auto start** |

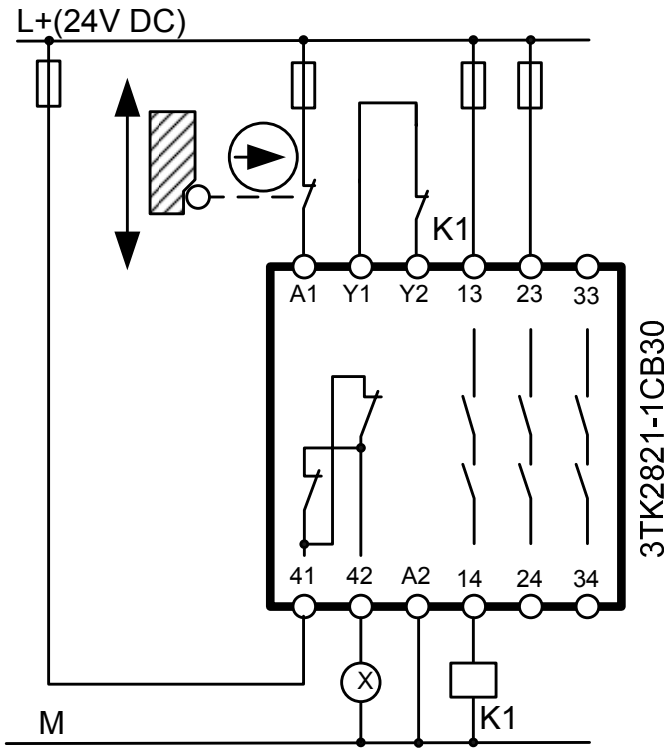


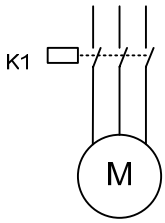


Not all faults are detected in the sensor circuit, e.g. a P fault in the A1 circuit. when a contact in the sensor welds. The user is responsible in ensuring that these types of faults do not occur.

Sensor cables must be routed so that they are protected; only safety-relevant sensors with positively opening contacts may be used as sensors.
Using this circuit example, Category 2 according to EN 954-1 can only be fulfilled, if, when the actuator fails, either an alarm is automatically generated or the machine control initiates a safe condition. Otherwise a second shutdown path is required.

| | | |
|---|---|---|
| **3TK2821** | **Category 3** (acc. EN 954-1)<br>**Protective door monitoring**<br>**Stop-Category 0** | **3NO 1NC**<br>**$V_s$ 24 V DC**<br>**auto start** |



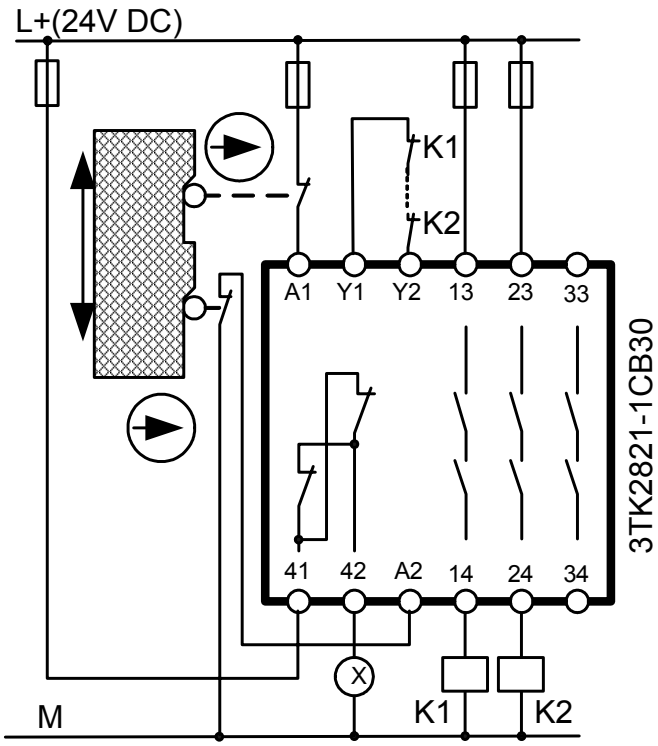


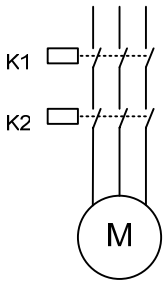


Not all faults are detected in the sensor circuit, e.g. a P fault in the A1 circuit. when a contact in the sensor welds. The user is responsible in ensuring that these types of faults do not occur.

Sensor cables must be routed so that they are protected; only safety-relevant sensors with positively-opening contacts may be used as sensors.
Category 4 according to EN 954-1 can be achieved with supplementary measures, e.g. by routing cables in a safety-relevant fashion.

1

| | | |
|---|---|---|
| **3TK2821 + 3TK2830** | **Category 2** (acc. EN 954-1)<br>**Protective door monitoring**<br>**Stop-Category 0** | **6NO 1NC**<br>**$V_s$ 24 V DC**<br>**auto start** |

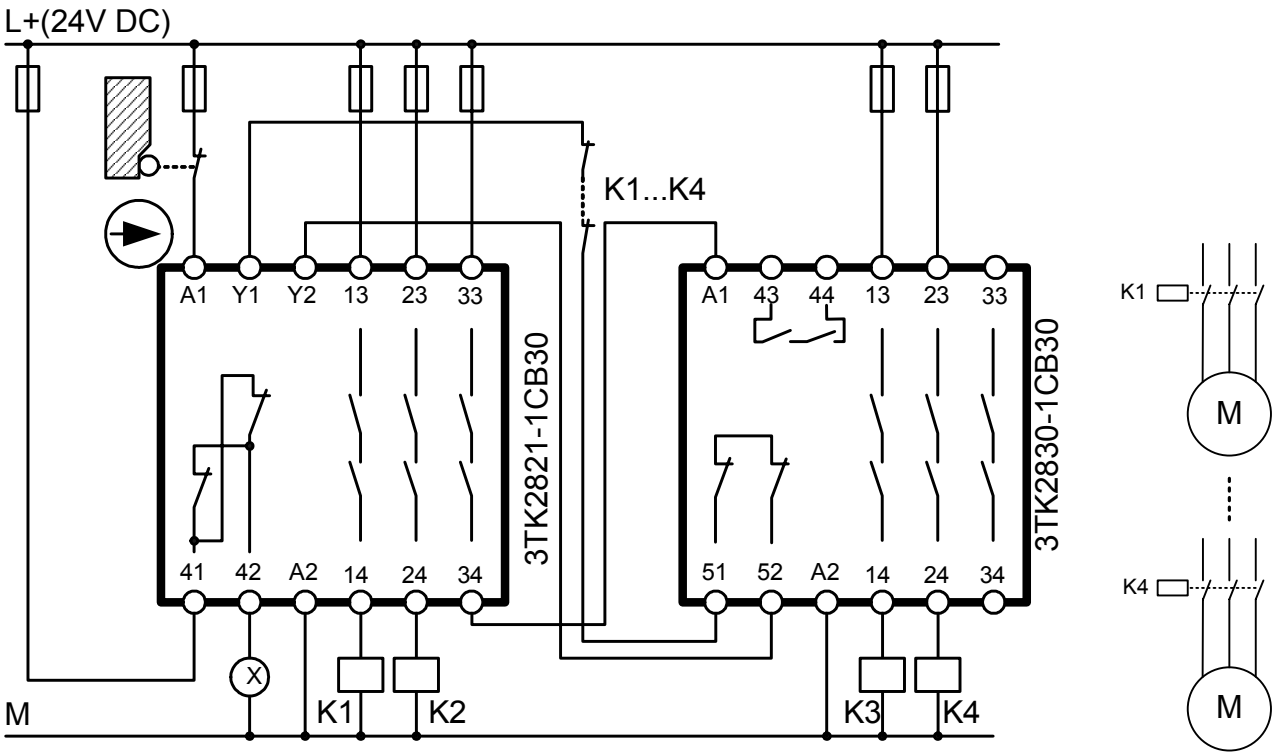


Not all faults are detected in the sensor circuit, e.g. a P fault in the A1 circuit, when a contact in the sensor welds. The user is responsible in ensuring that these types of faults do not occur.

Sensor cables must be routed so that they are protected; only safety-relevant sensors with positively opening contacts may be used as sensors.
Using this circuit example, Category 2 according to EN 954-1 can only be fulfilled, if, when the actuator fails, either an alarm is automatically generated or the machine control initiates a safe condition. Otherwise a second shutdown path is required.
Up to eight 3TK2830 expansion devices may be connected to an FK (enable circuit) of the basic 3TK2821 device.
If several expansion devices are cascaded, then the response times must be added.
If faults can be excluded – such as a P fault or M fault – then it is permissible to control an expansion device (cascading) through one channel. This is always fulfilled within a control cabinet or when connecting cables are routed in a protected fashion.

## 3TK2821 + 3TK2830

**Category 3** (acc. EN 954-1)
**E-Stop monitoring**
**Stop-Category 0**

**6NO 1NC**
**$V_s$ 24 V DC**
**manual start**

1

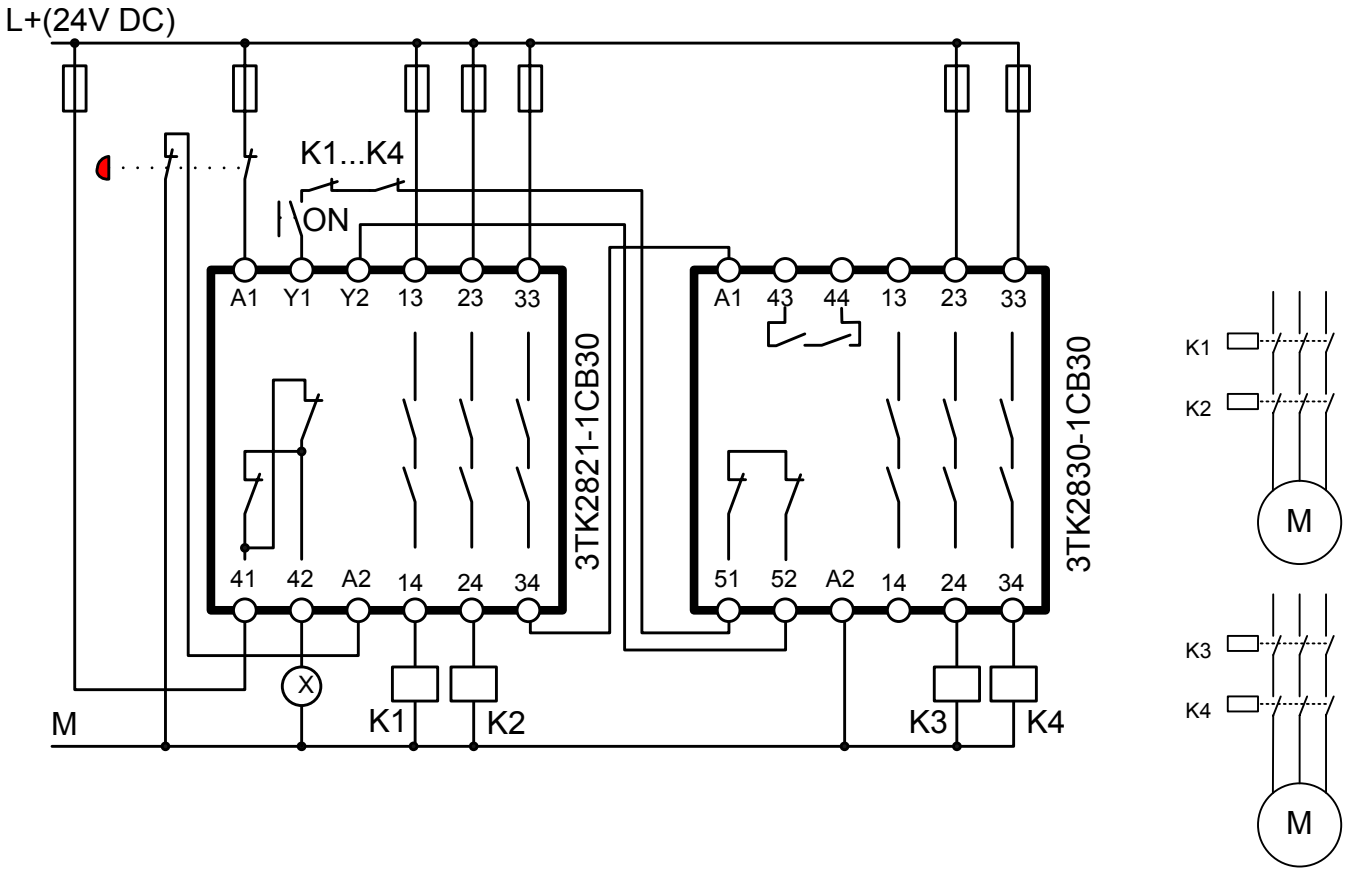


Not all faults are detected in the sensor circuit, e.g. a P fault in the A1 circuit. when a contact in the sensor welds. The user is responsible in ensuring that these types of faults do not occur.

Sensor cables must be routed so that they are protected; only safety-relevant sensors with positively-opening contacts may be used as sensors.
Up to eight 3TK2830 expansion devices may be connected to an FK (enable circuit) of the basic 3TK2821 device.
If several expansion devices are cascaded, then the response times must be added.
If faults can be excluded – such as a P fault or M fault – then it is permissible to control an expansion device (cascading) through one channel. This is always fulfilled within a control cabinet or when connecting cables are routed in a protected fashion.

1

| | | |
|---|---|---|
| **3TK2821 + 3TK2830** | **Category 3** (acc. EN 954-1)<br>**Protective door monitoring**<br>**Stop-Category 0** | **6NO 1NC**<br>**$V_s$ 24 V DC**<br>**auto start** |

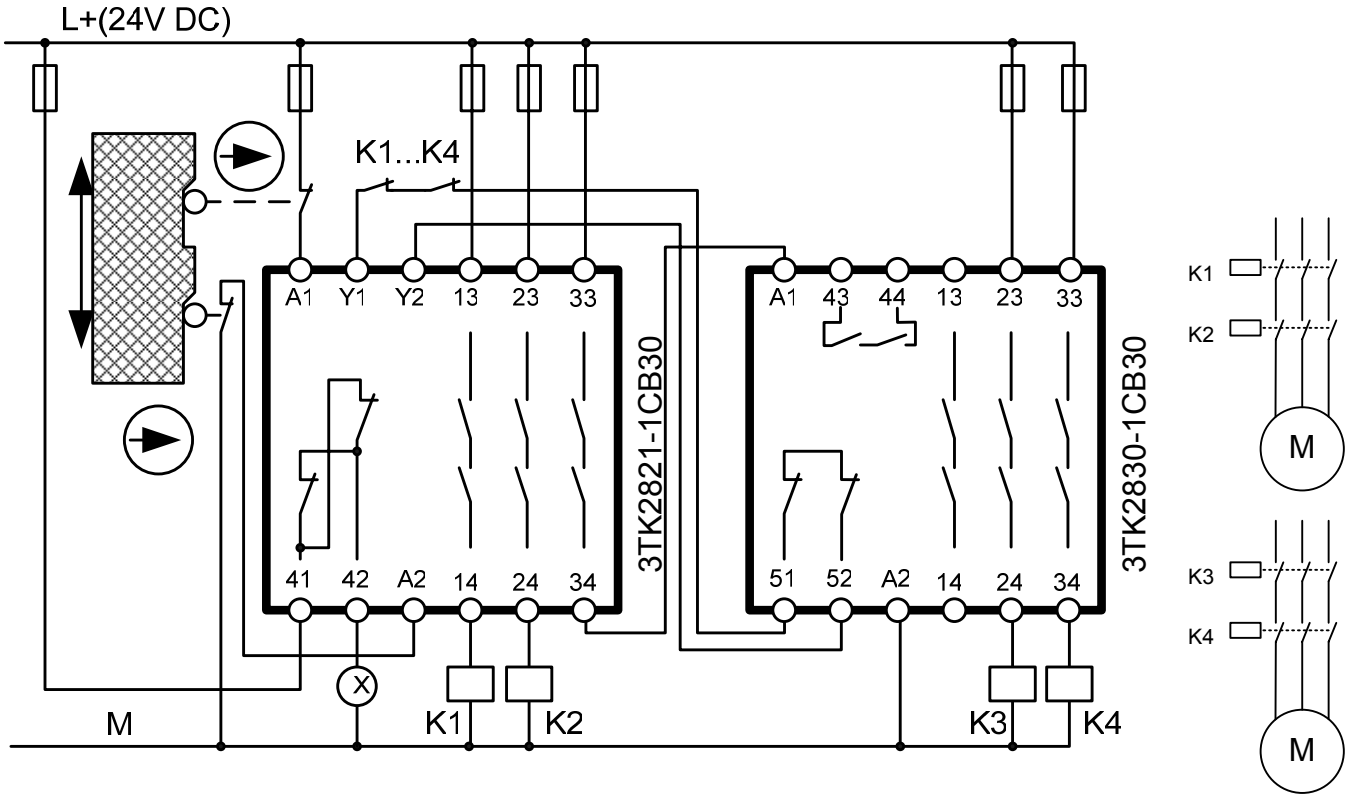


Not all faults are detected in the sensor circuit, e.g. a P fault in the A1 circuit, when a contact in the sensor welds. The user is responsible in ensuring that these types of faults do not occur.

Sensor cables must be routed so that they are protected; only safety-relevant sensors with positively-opening contacts may be used as sensors.
If several expansion devices are cascaded, then the response times must be added.
If faults can be excluded – such as a P fault or M fault – then it is permissible to control an expansion device (cascading) through one channel. This is always fulfilled within a control cabinet or when connecting cables are routed in a protected fashion.

| | | |
|---|---|---|
| **3TK2822** | **Category 4** (acc. EN 954-1)<br>**Protective door monitoring**<br>**Stop-Category 0** | **2NO**<br>**$V_s$ 24 V DC**<br>**auto start** |



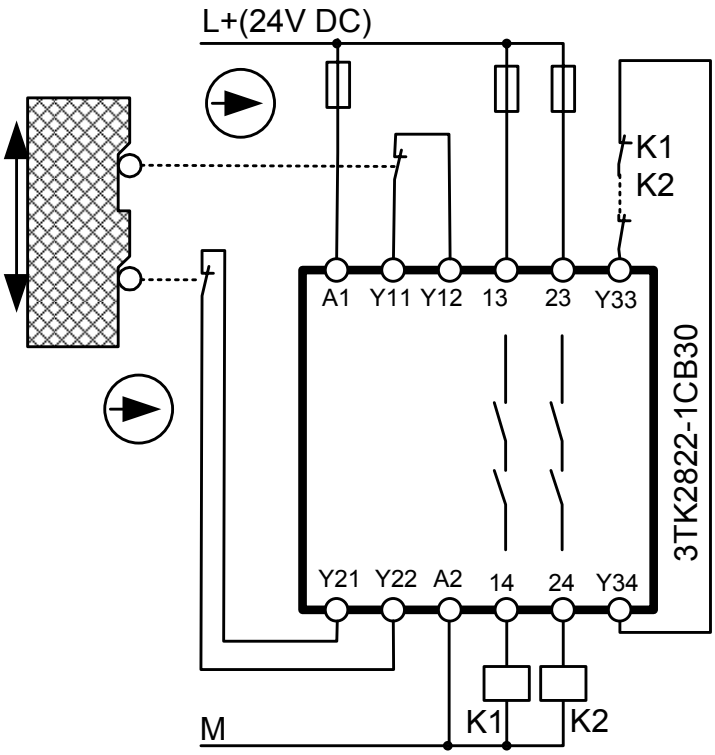


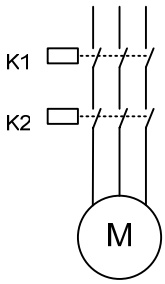


The safety relay can only be used for two-channel sensors.

Sensor cables must be routed so that they are protected; only safety-relevant sensors with positively opening contacts may be used as sensors.
For Category 4, it is not permissible to connect several position switches in series to implement a protective door monitoring function (due to an inadequate level of fault detection).

1

| Safety relay | Function | Comments |
|---|---|---|
| **3TK2823** | **Category 4** (acc. EN 954-1)<br>**E-Stop monitoring**<br>**Stop-Category 0** | **2NO**<br>**$V_s$ 24 V DC**<br>**monitored start** |

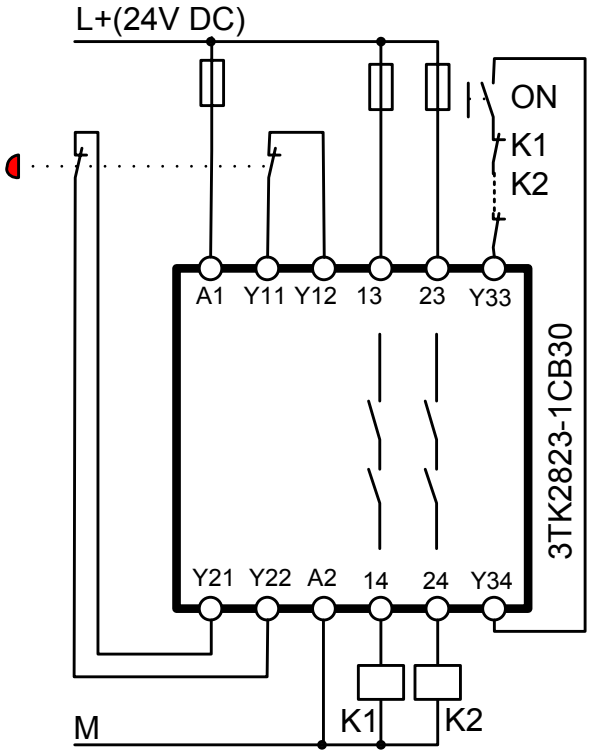


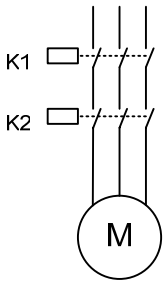


The safety relay can only be used for two-channel sensors.

Sensor cables must be routed so that they are protected; only safety-relevant sensors with positively-opening contacts may be used as sensors.
For Category 4, several EMERGENCY STOP commanding devices may be connected in series.

| Safety relay | Function | Comments |
|---|---|---|
| **3TK2823 + 3TK2830 + 3TK2830** | **Category 4** (acc. EN 954-1)<br>**E-Stop monitoring**<br>**Stop-Category 0** | **9NO**<br>**$V_s$ 24 V DC**<br>**monitored start** |



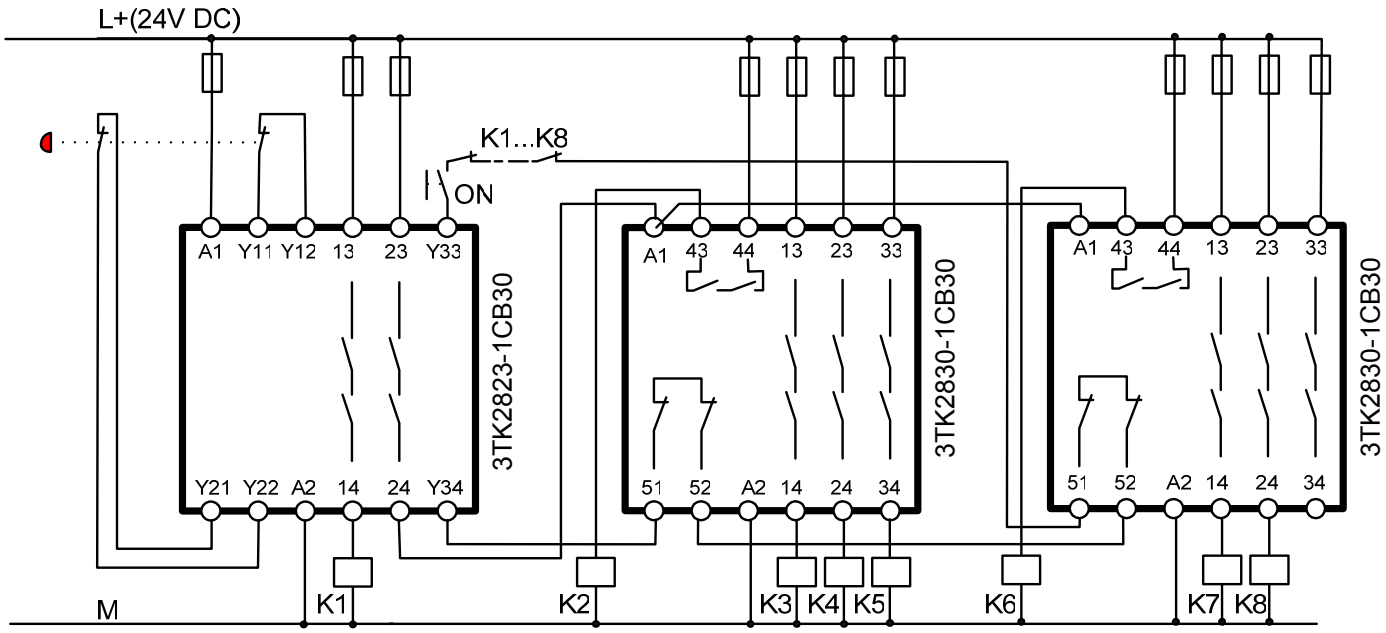


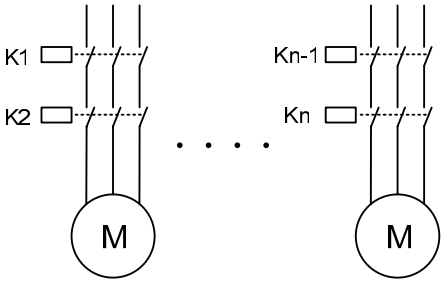


Up to eight 3TK2830 expansion devices may be connected to an FK (enable circuit) of the basic 3TK2821 device.

The safety relay can only be used for two-channel sensors.

Sensor cables must be routed so that they are protected; only safety-relevant sensors with positively-opening contacts may be used as sensors.
If several expansion devices are cascaded, then the response times must be added.
If faults can be excluded – such as a P fault or M fault – then it is permissible to control an expansion device (cascading) through one channel. This is always fulfilled within a control cabinet or when connecting cables are routed in a protected fashion.
For Category 4, several EMERGENCY STOP commanding devices may be connected in series.

1

## 3TK2823 + 3TK2856

**Category 4** (acc. EN 954-1)
**E-Stop monitoring**
**Stop-Category 0**

**7NO 1NOel. 1NC**
**Vs 24 V DC**
**monitored start**

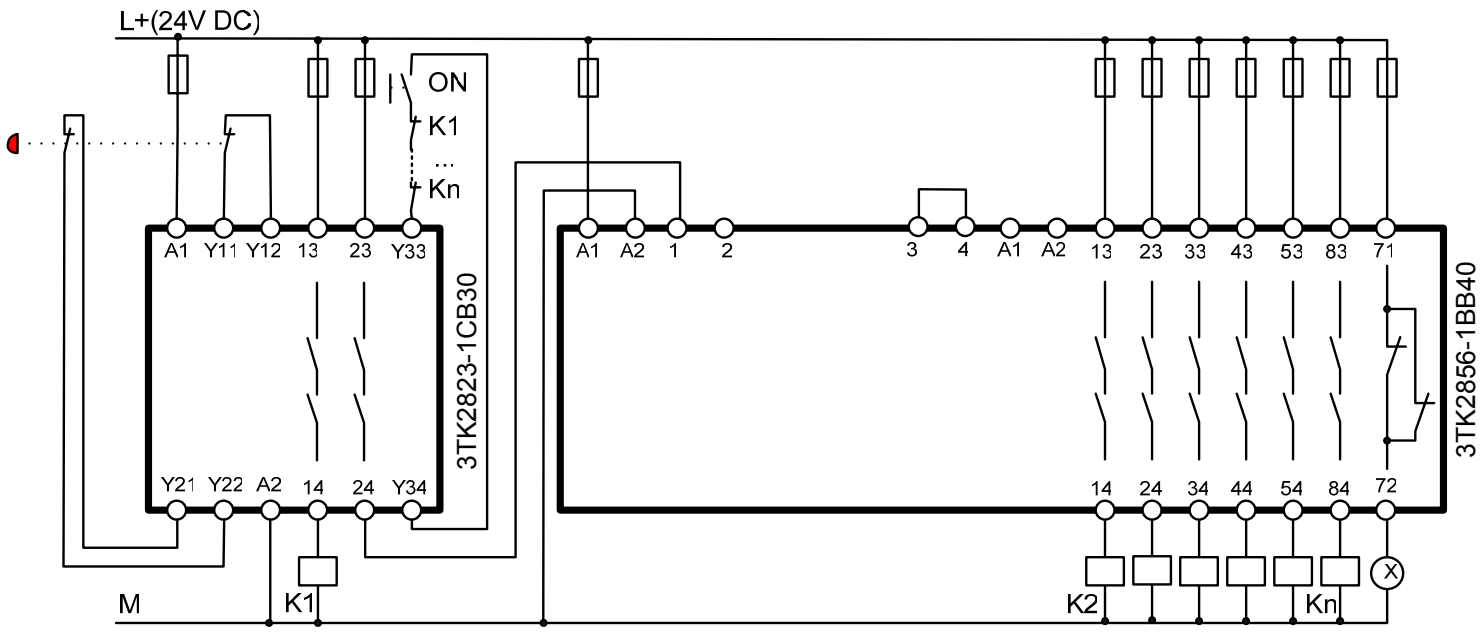


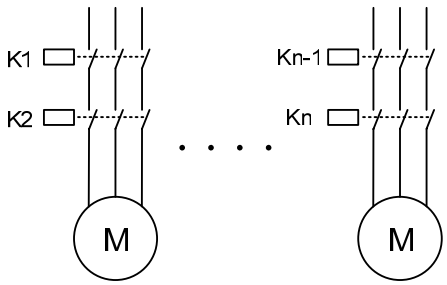


The safety relay can only be used for two-channel sensors.

Sensor cables must be routed so that they are protected; only safety-relevant sensors with positively-opening contacts may be used as sensors.
If faults can be excluded – such as a P fault or M fault – then it is permissible to control an expansion device (cascading) through one channel. This is always fulfilled within a control cabinet or when connecting cables are routed in a protected fashion.
For Category 4, several EMERGENCY STOP commanding devices may be connected in series.

## 3TK2823 + 3TK2834

**Category 4** (acc. EN 954-1)
**E-Stop monitoring and two hand monitoring**
**Stop-Category 0**

**2NO 2NC**
**$V_s$ 24 V DC**
**monitored start**



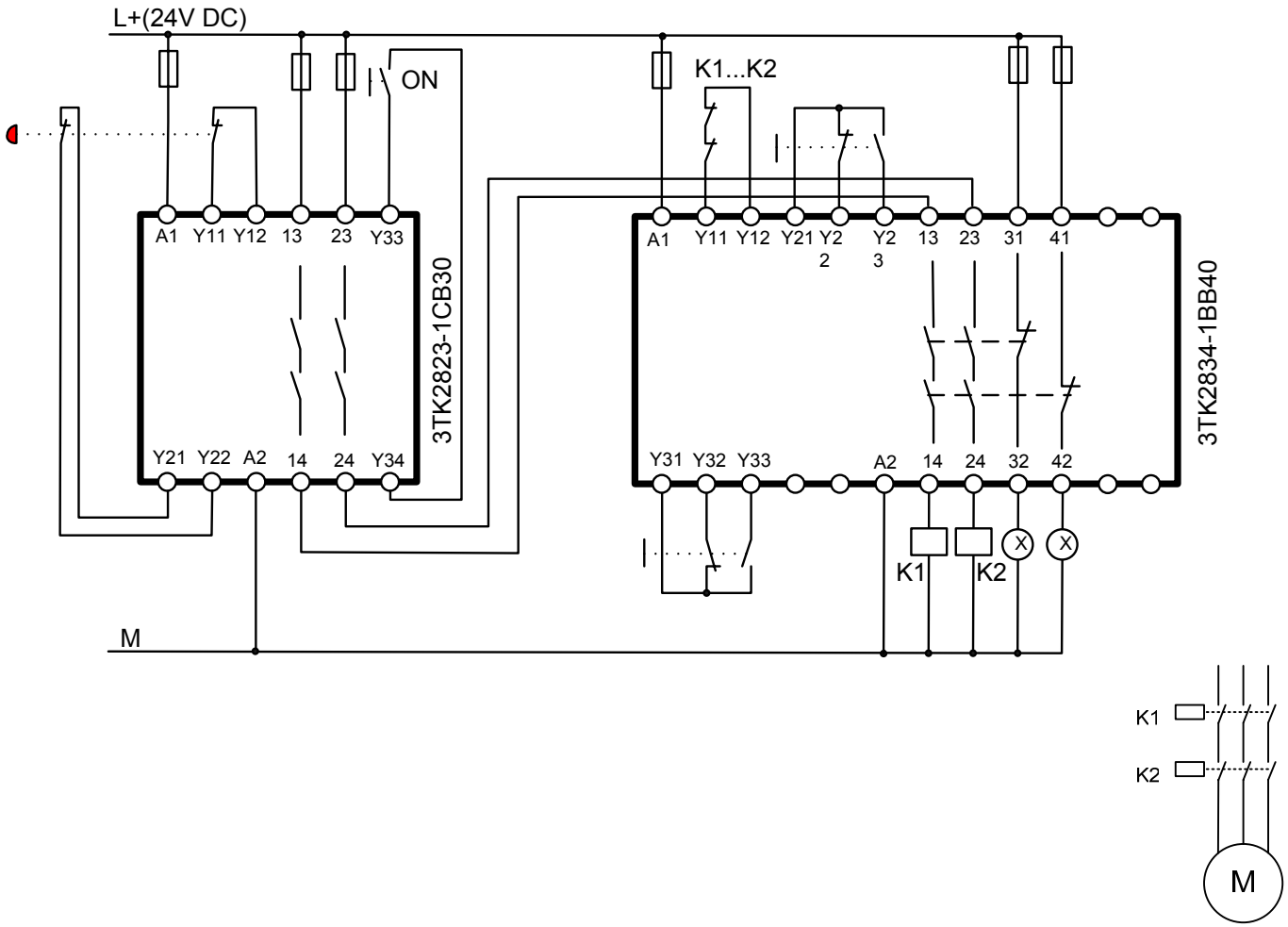


The safety relay 3TK2823 can only be used for two-channel sensors.

Sensor cables must be routed so that they are protected; only safety-relevant sensors with positively-opening contacts may be used as sensors.
For Category 4, several EMERGENCY STOP commanding devices may be connected in series.

| | Safety relay | Function | Comments |
|---|---|---|---|
| 1 | 3TK2823 + 3TK2830 + 3TK2824 + 3TK2824 | Category 4 (acc. EN 954-1)<br>E-Stop monitoring<br>Stop-Category 0<br><br>3 Switchboards<br>3 E-Stop<br>When an Emergency Stop button is pressed, all of the 3TK28 device in the switchboard shut up | 6NO<br>$V_s$ 24 V DC<br>monitored start |

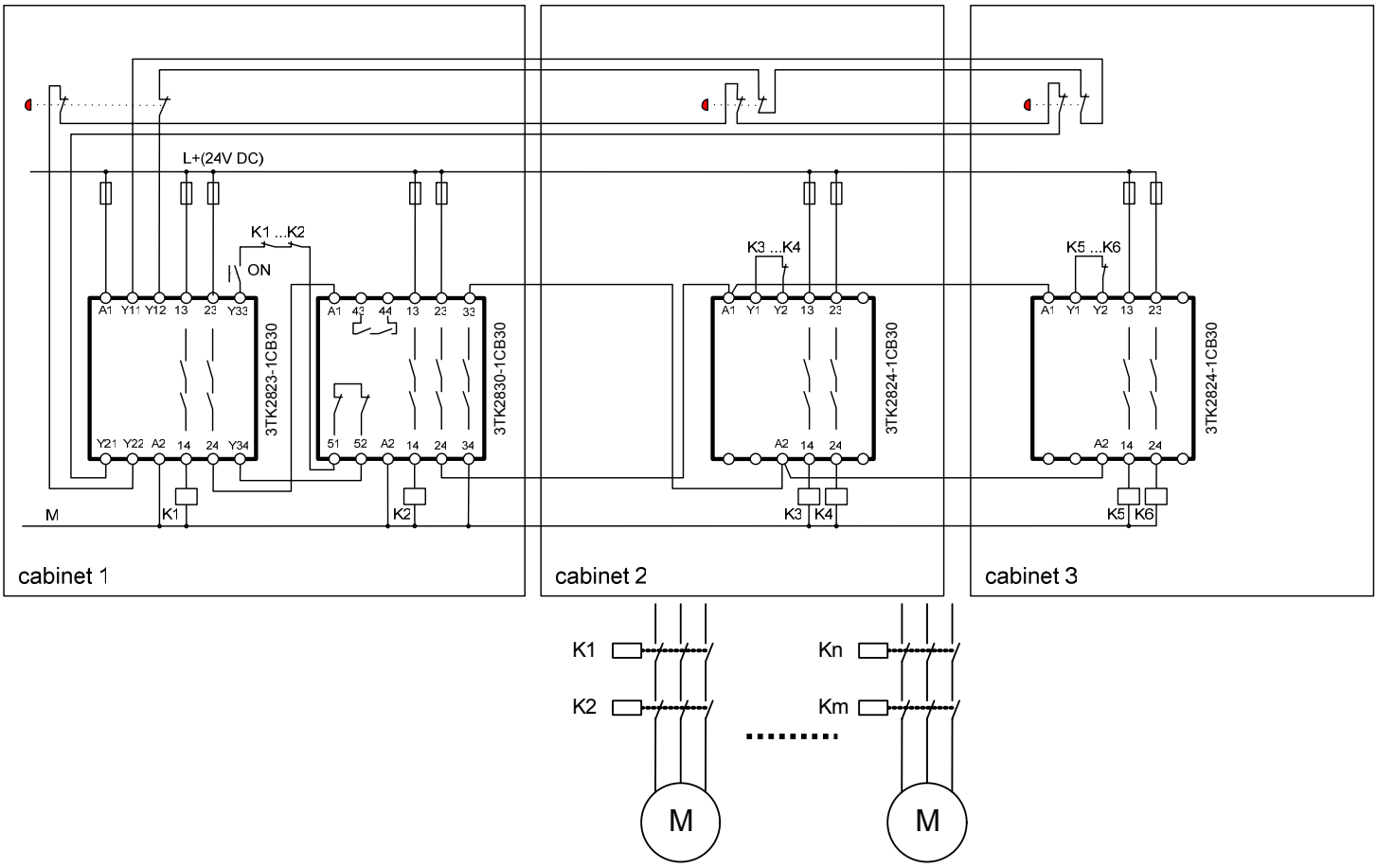


The safety relay can only be used for two-channel sensors.
EMERGENCY STOP commanding devices are monitored by a 3TK28 in cabinet 1:
When an EMERGENCY STOP commanding device is actuated, all of the actuators in the cabinets are shut down.
The actuators of a cabinet are monitored by the associated 3TK28.

Sensor cables must be routed so that they are protected; only safety-relevant sensors with positively-opening contacts may be used as sensors.
For Category 4, several EMERGENCY STOP commanding devices may be connected in series.

| | | |
|---|---|---|
| **3TK2824** | **Category 2** (acc. EN 954-1)<br>**E-Stop monitoring**<br>**Stop-Category 0** | **2NO**<br>**$V_s$ 24 V DC**<br>**manual start** |



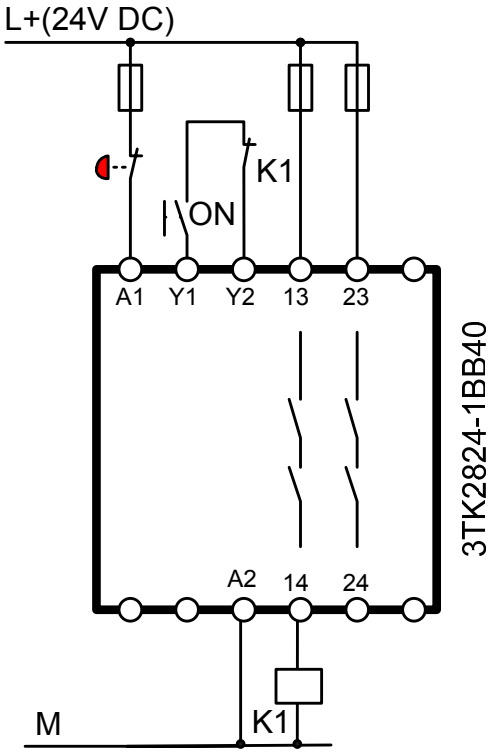


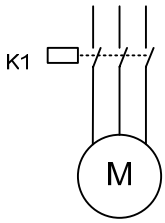


Not all faults are detected in the sensor circuit, e.g. a P fault in the A1 circuit. when a contact in the sensor welds. The user is responsible in ensuring that these types of faults do not occur.

Sensor cables must be routed so that they are protected; only safety-relevant sensors with positively-opening contacts may be used as sensors.
Using this circuit example, Category 2 according to EN 954-1 can only be fulfilled, if, when the actuator fails, either an alarm is automatically generated or the machine control initiates a safe condition. Otherwise a second shutdown path is required.

1

| | | |
|---|---|---|
| **3TK2824-1AL20** | **Category 2** (acc. EN 954-1)<br>**E-Stop monitoring**<br>**Stop-Category 0** | **2NO**<br>**$V_s$ 230 V AC**<br>**manual start** |

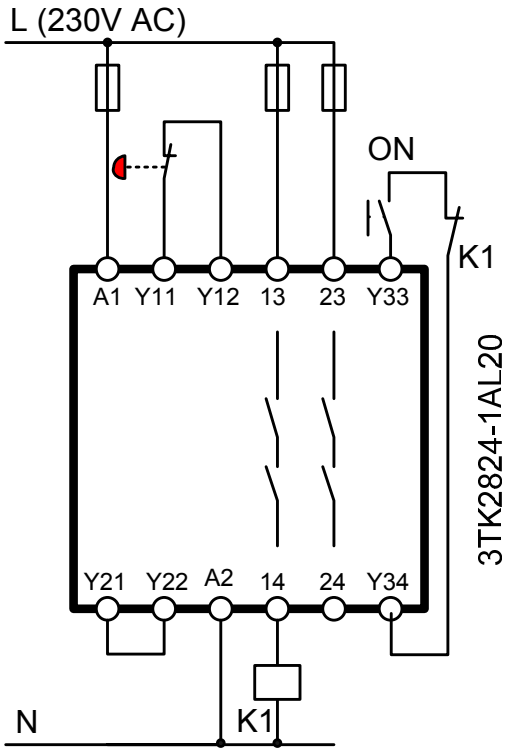


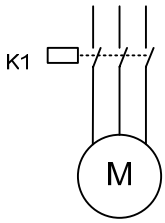


Not all faults are detected in the sensor circuit – e.g. a P fault in Y11 Y12 circuit, M fault in the Y21 Y22 circuit, when a contact in the sensor welds. The user is responsible in ensuring that these types of faults do not occur.

Sensor cables must be routed so that they are protected; only safety-relevant sensors with positively-opening contacts may be used as sensors.
Using this circuit example, Category 2 according to EN 954-1 can only be fulfilled, if, when the actuator fails, either an alarm is automatically generated or the machine control initiates a safe condition. Otherwise a second shutdown path is required.

| | | |
|---|---|---|
| **3TK2824-1AL20** | **Category 3** (acc. EN 954-1)<br>**E-Stop monitoring**<br>**Stop-Category 0** | **2NO**<br>**$V_s$ 230 V AC**<br>**manual start** |



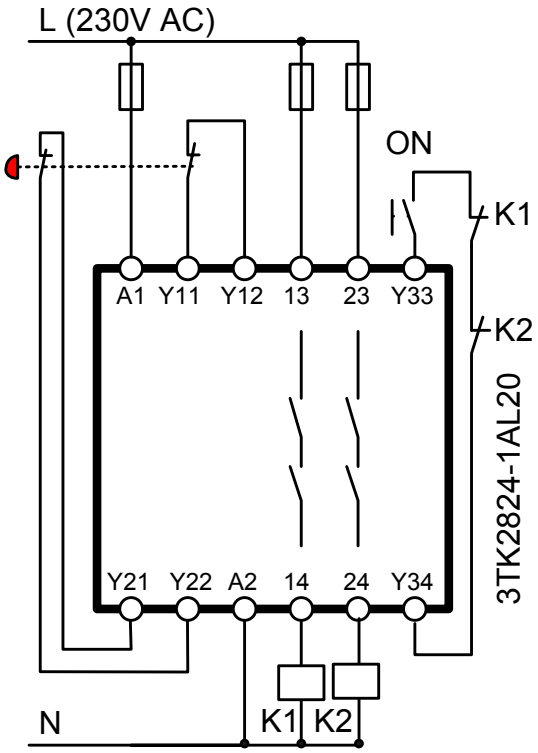


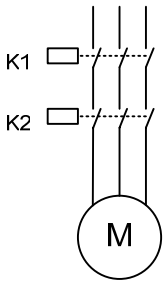


Not all faults are detected in the sensor circuit – e.g. a P fault in Y11 Y12 circuit, M fault in the Y21 Y22 circuit, when a contact in the sensor welds. The user is responsible in ensuring that these types of faults do not occur.

Sensor cables must be routed so that they are protected; only safety-relevant sensors with positively-opening contacts may be used as sensors.

1

| | | |
|---|---|---|
| **3TK2824** | **Category 3** (acc. EN 954-1)<br>**E-Stop monitoring**<br>**Stop-Category 0** | **2NO**<br>**$V_s$ 24 V DC**<br>**manual start** |

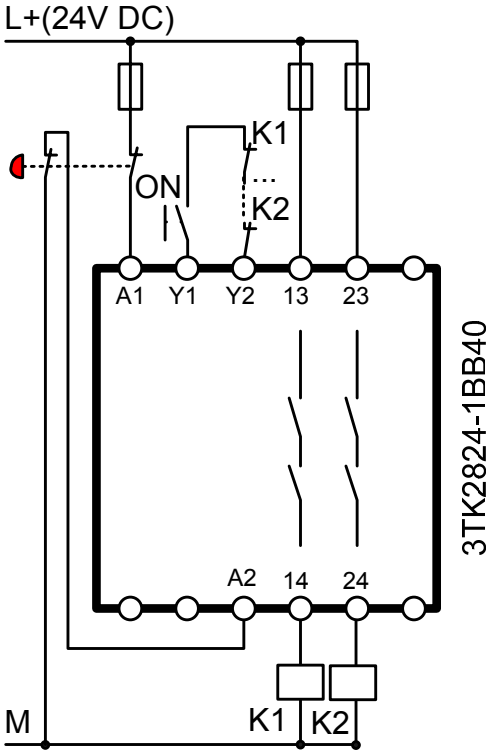


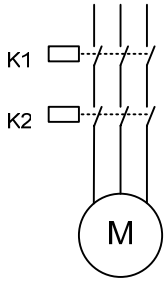


Not all faults are detected in the sensor circuit, e.g. a P fault in the A1 circuit. M fault in the A2 circuit, when a contact in the sensor welds. The user is responsible in ensuring that these types of faults do not occur.

Sensor cables must be routed so that they are protected; only safety-relevant sensors with positively-opening contacts may be used as sensors.

| | | |
|---|---|---|
| **3TK2824** | **Category 2** (acc. EN 954-1)<br>**protective door monitoring**<br>**Stop-Category 0** | **2NO**<br>**$V_s$ 24 V DC**<br>**auto start** |



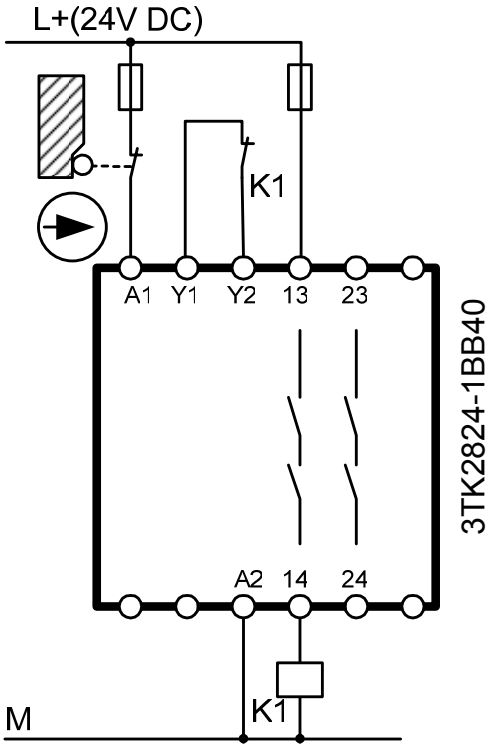


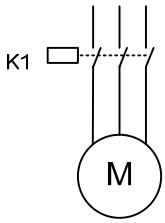


Not all faults are detected in the sensor circuit – e.g. a P fault in A1 circuit, when a contact in the sensor welds. The user is responsible in ensuring that these types of faults do not occur.

Sensor cables must be routed so that they are protected; only safety-relevant sensors with positively-opening contacts may be used as sensors.
Using this circuit example, Category 2 according to EN 954-1 can only be fulfilled, if, when the actuator fails, either an alarm is automatically generated or the machine control initiates a safe condition. Otherwise a second shutdown path is required.

1

| | | |
|---|---|---|
| **3TK2824** | **Category 3** (acc. EN 954-1)<br>**protective door monitoring**<br>**Stop-Category 0** | **2NO**<br>**$V_s$ 24 V DC**<br>**auto start** |

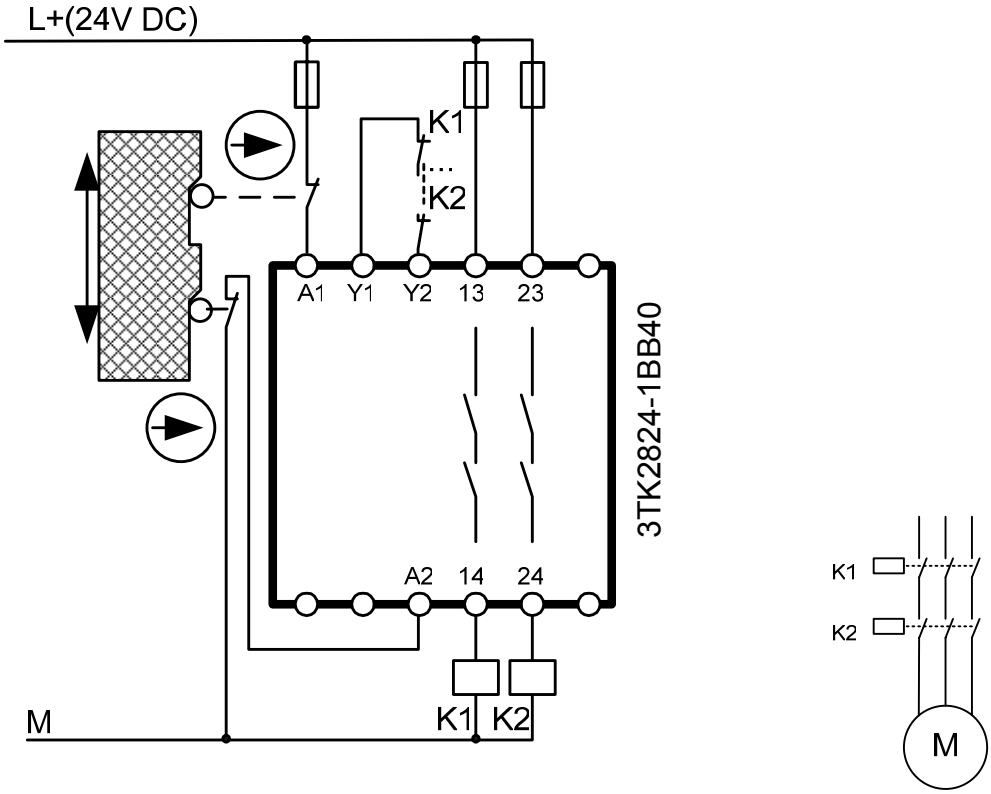


Not all faults are detected in the sensor circuit, e.g. a P fault in the A1 circuit, when a contact in the sensor welds. The user is responsible in ensuring that these types of faults do not occur.

Sensor cables must be routed so that they are protected; only safety-relevant sensors with positively-opening contacts may be used as sensors.

| | | |
|---|---|---|
| **3TK2825** | **Category 2** (acc. EN 954-1)<br>**protective door monitoring**<br>**Stop-Category 0** | **3NO 2NC**<br>**$V_s$ 24 V DC**<br>**auto start** |



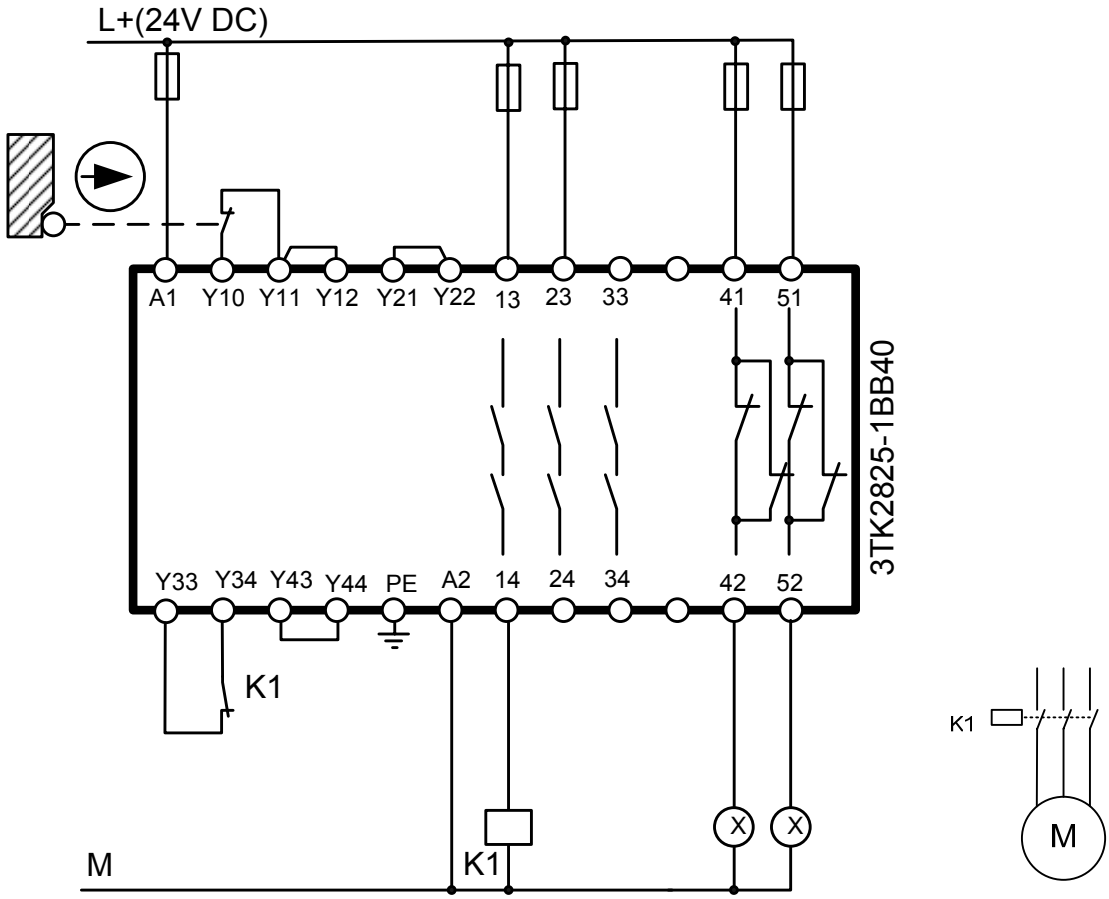


Not all faults are detected in the sensor circuit – e.g. a P fault in Y10 Y11 circuit, when a contact in the sensor welds. The user is responsible in ensuring that these types of faults do not occur.

Sensor cables must be routed so that they are protected; only safety-relevant sensors with positively-opening contacts may be used as sensors.
Using this circuit example, Category 2 according to EN 954-1 can only be fulfilled, if, when the actuator fails, either an alarm is automatically generated or the machine control initiates a safe condition. Otherwise a second shutdown path is required.

1

| | | |
|---|---|---|
| **3TK2825-1AL20** | **Category 2** (acc. EN 954-1)<br>**E-Stop Monitoring**<br>**Stop-Category 0** | **3NO 2NC**<br>**$V_s$ 230 V AC**<br>**monitored start** |

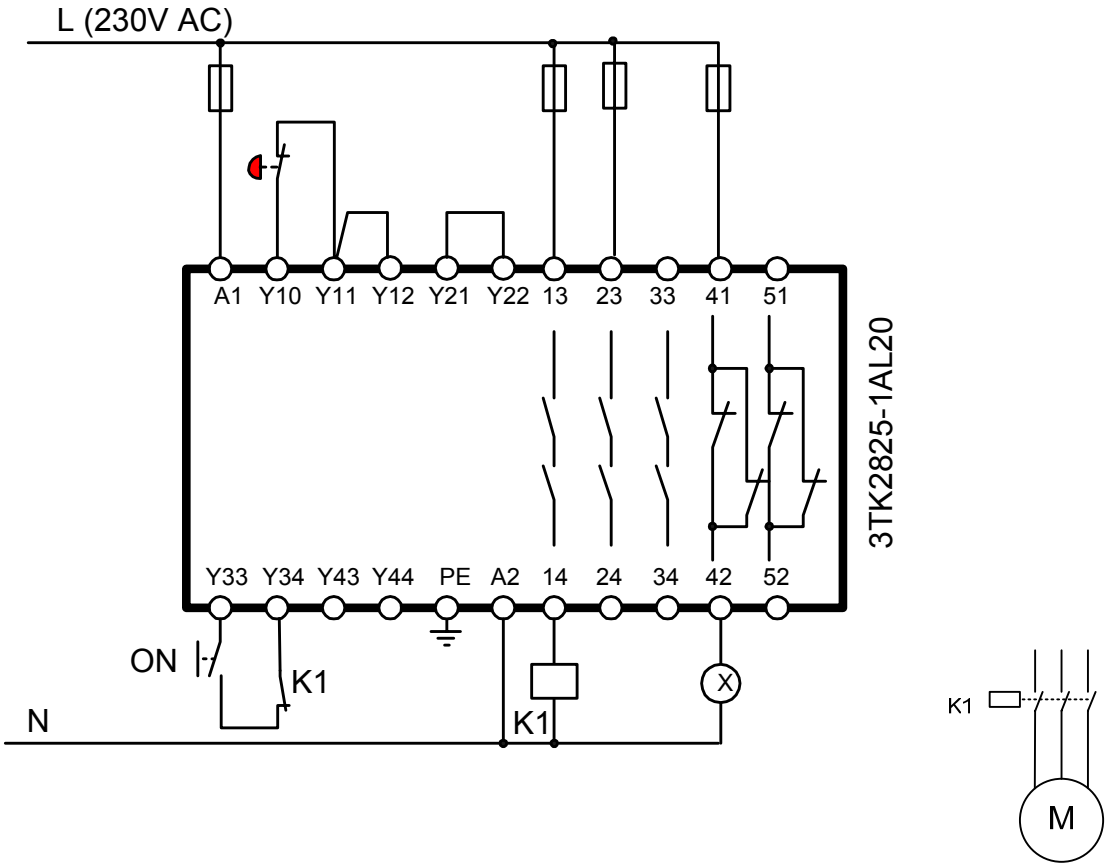


Not all faults are detected in the sensor circuit – e.g. a P fault in Y11 Y12 circuit, M fault in the Y21 Y22 circuit, when a contact in the sensor welds. The user is responsible in ensuring that these Types of faults do not occur.

Sensor cables must be routed so that they are protected; only safety-relevant sensors with positively-opening contacts may be used as sensors.
Using this circuit example, Category 2 according to EN 954-1 can only be fulfilled, if, when the actuator fails, either an alarm is automatically generated or the machine control initiates a safe condition. Otherwise a second shutdown path is required.

| | | |
|---|---|---|
| **3TK2825** | **Category 2** (acc. EN 954-1)<br>**E-Stop Monitoring**<br>**Stop-Category 0** | **3NO 2NC**<br>**$V_s$ 24 V DC**<br>**monitored start** |



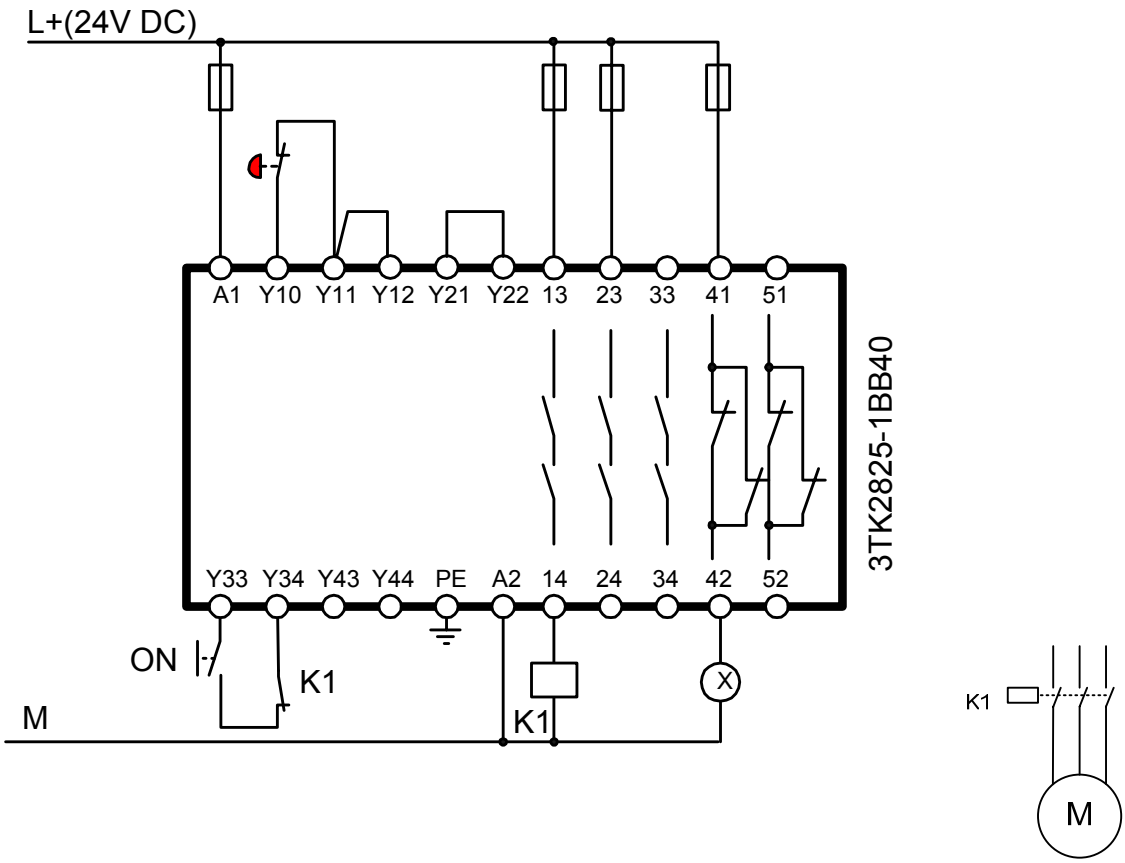


Only safety-relevant sensors with positively-opening contacts may be used as sensors. Two oactuators (e.g. contactors) should be used in the load circuit.

Sensor cables must be routed so that they are protected; only safety-relevant sensors with positively-opening contacts may be used as sensors.
Using this circuit example, Category 2 according to EN 954-1 can only be fulfilled, if, when the actuator fails, either an alarm is automatically generated or the machine control initiates a safe condition. Otherwise a second shutdown path is required.

1

## 3TK2825 + 3TK2830

**Category 4** (acc. EN 954-1)
**E-Stop Monitoring**
**Stop-Category 0**

**6NO 2NC**
**$V_s$ 24 V DC**
**monitored start**

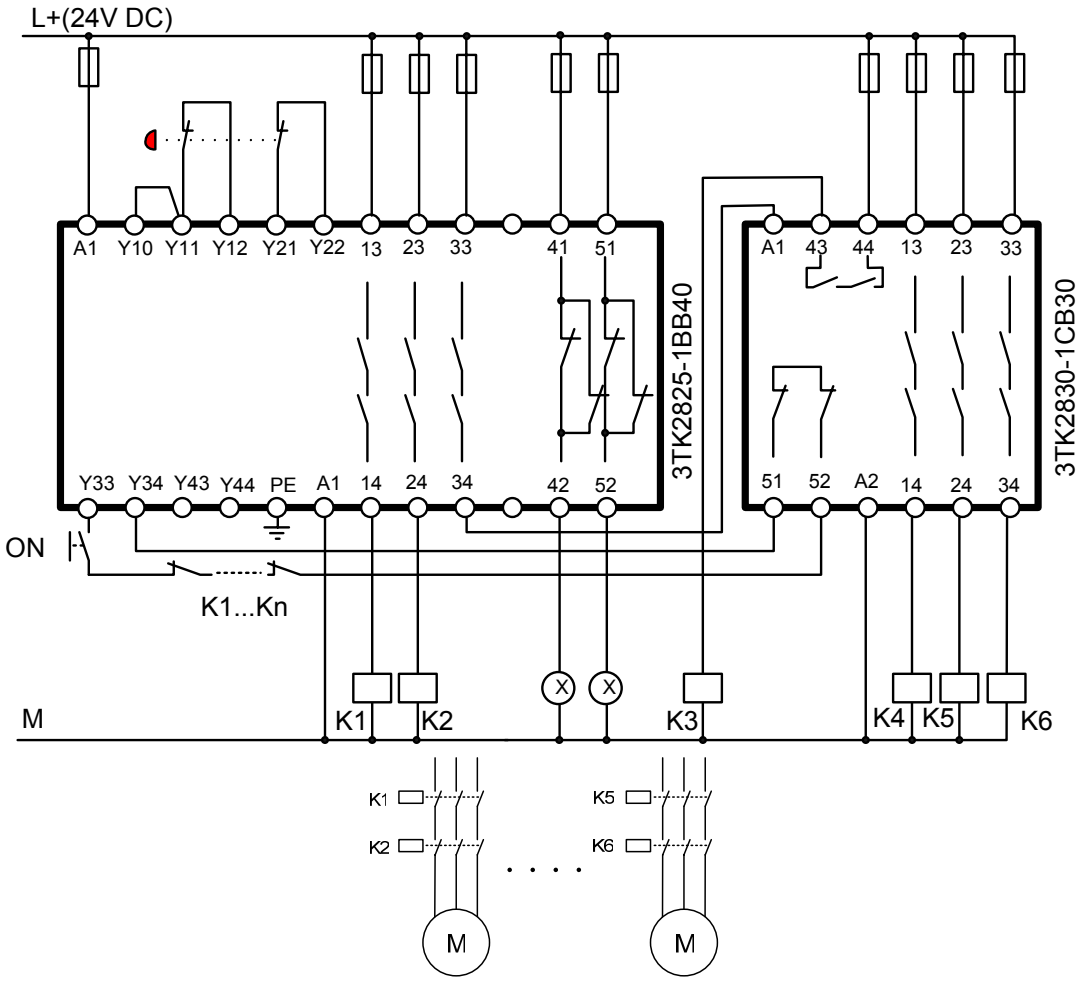


Up to eight 3TK2830 expansion devices can be connected to an FK (enable circuit) of the 3TK2825 basic device. When several expansion devices are cascaded, the response times must be added. When circuit faults are excluded – such as P fault or M fault – then it is permissible to control an expansion device through one channel (cascading). This condition is always fulfilled within a control cabinet or when connecting cables are routed in a protected fashion.
For Category 4, several EMERGENCY STOP commanding devices may be connected in series.

Sensor cables must be routed so that they are protected; only safety-relevant sensors with positively-opening contacts may be used as sensors.

| | | |
|---|---|---|
| **3TK2825** | **Category 4** (acc. EN 954-1)<br>**E-Stop Monitoring**<br>**Stop-Category 0** | **3NO 2NC**<br>**$V_s$ 24 V DC**<br>**monitored start** |



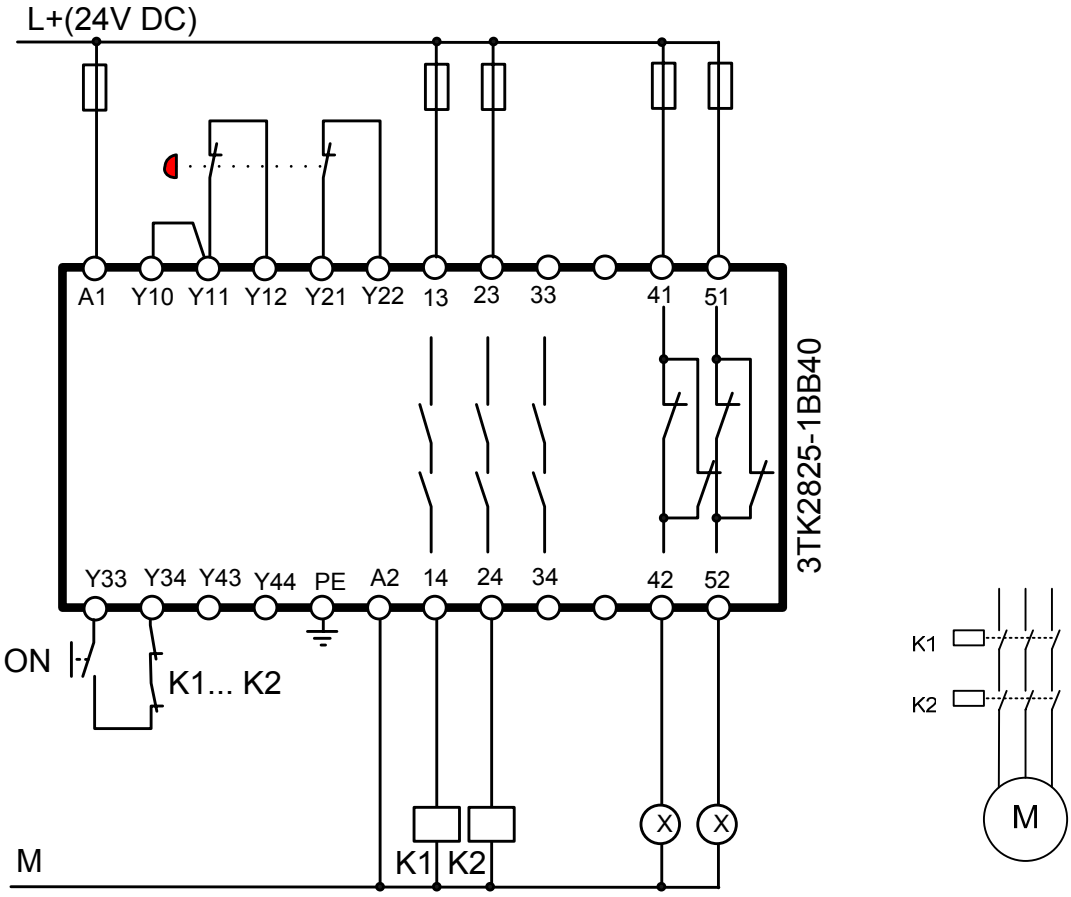


For Category 4, several EMERGENCY STOP commanding devices may be connected in series.

Sensor cables must be routed so that they are protected; only safety-relevant sensors with positively-opening contacts may be used as sensors.

1

| | | |
|---|---|---|
| **3TK2825** | **Category 4** (acc. EN 954-1)<br>**protective door monitoring**<br>**Stop-Category 0** | **3NO 2NC**<br>**$V_s$ 24 V DC**<br>**autostart** |

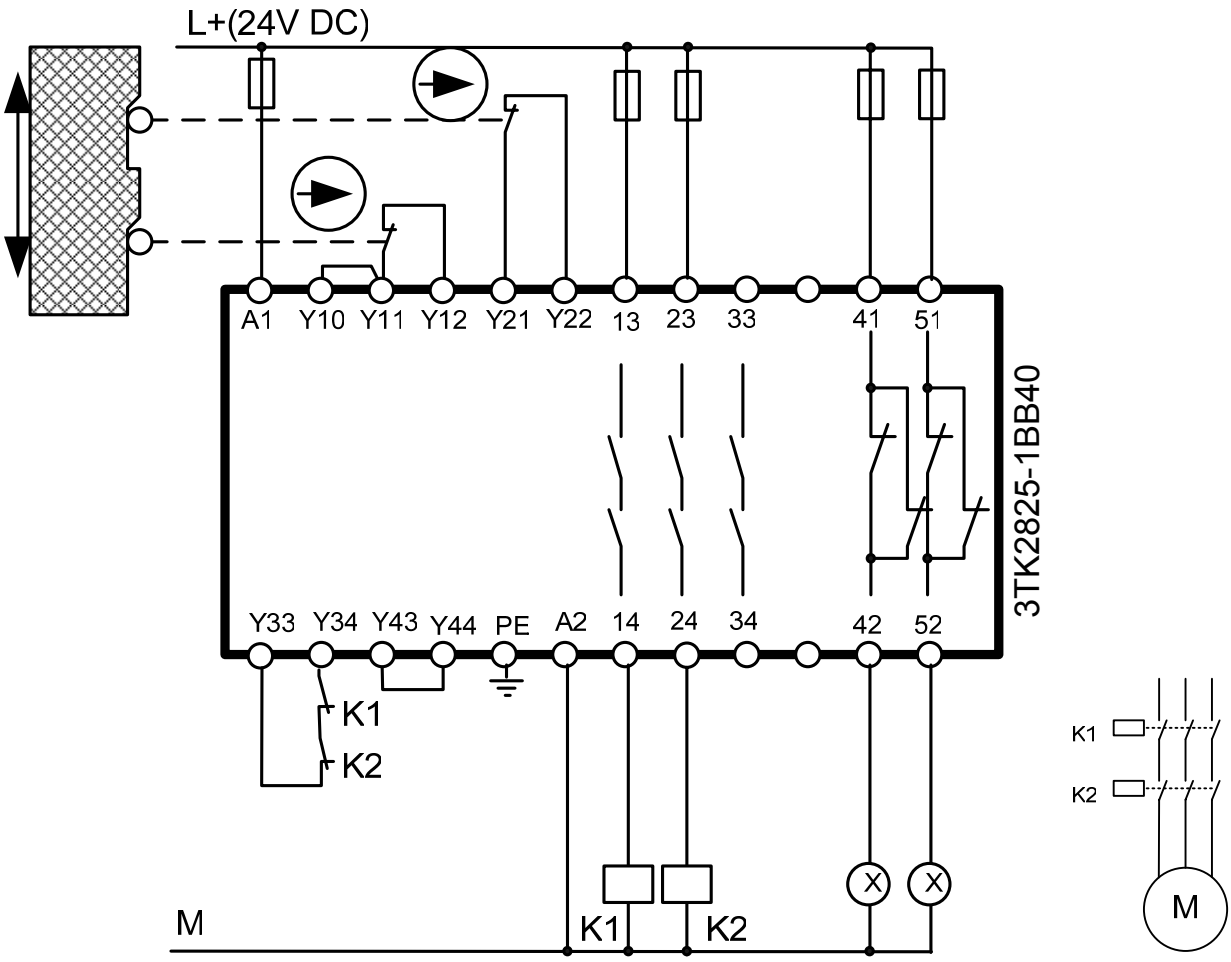


For Category 4, it is not permissible to connect several position switches in series to implement a protective door monitoring function (due to an inadequate level of fault detection).

Sensor cables must be routed so that they are protected; only safety-relevant sensors with positively-opening contacts may be used as sensors.

## 3TK2825 + 3TK2830

**Category 4** (acc. EN 954-1)
**Protective door monitoring**
**Stop-Category 0**

**6NO 2NC**
**$V_s$ 24 V DC**
**auto start**



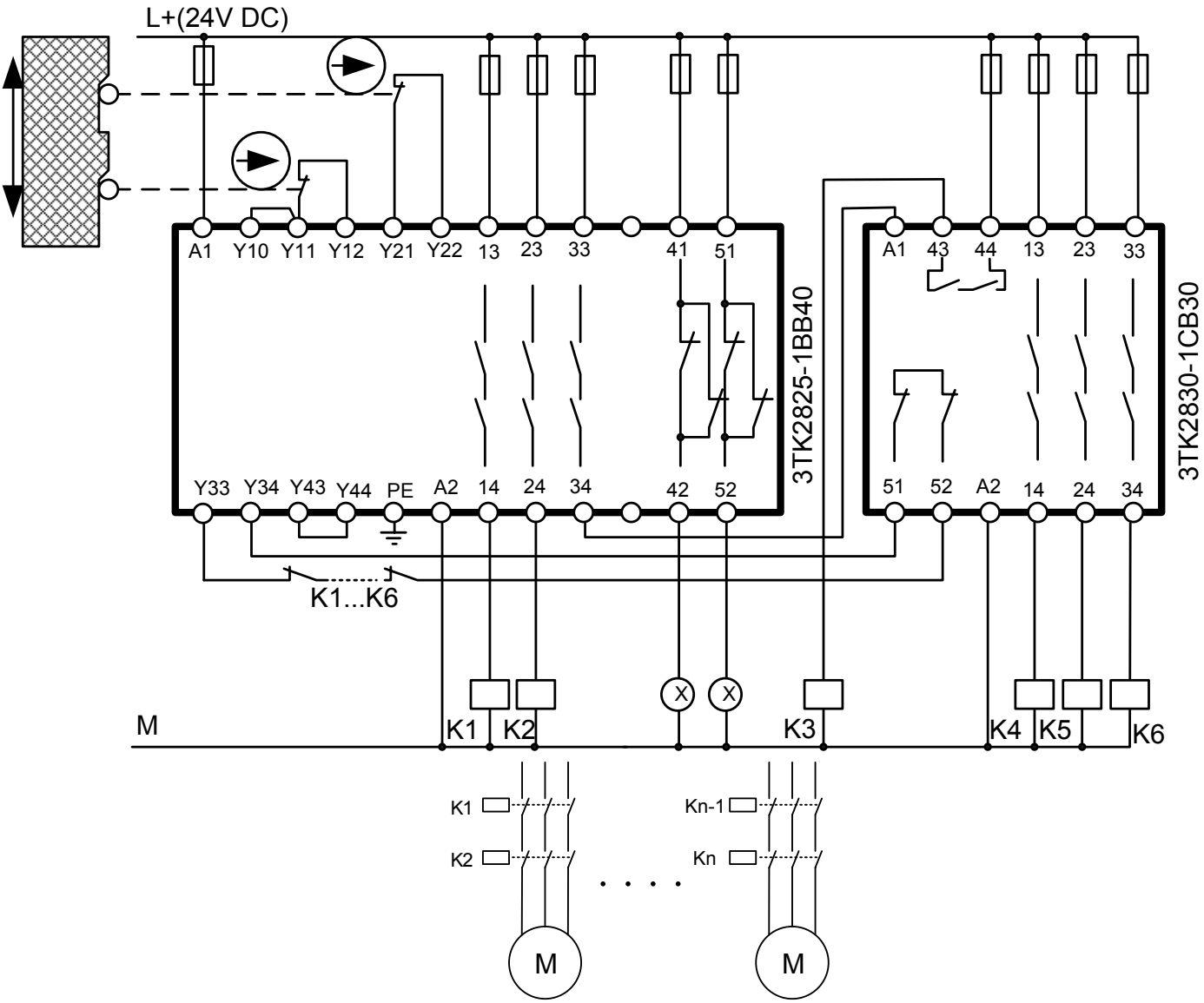


For Category 4, it is not permissible to connect several position switches in series to implement a protective door monitoring function (due to an inadequate level of fault detection). Up to eight 3TK2830 expansion devices can be connected to an FK (enable circuit) of the 3TK2825 basic device. When several expansion devices are cascaded, the response times must be added. When circuit faults are excluded – such as a P fault or a M fault – then it is permissible to control an expansion device through one channel (cascading). This condition is always fulfilled within a control cabinet or when connecting cables are routed in a protected fashion.

Sensor cables must be routed so that they are protected; only safety-relevant sensors with positively-opening contacts may be used as sensors.

1

## 3TK2825 + 3TK2824 + 3TK2824

**Category 2** (acc. EN 954-1)
**E-Stop Monitoring**
**Stop-Category 0**

**E-Stop distributed over several cabinets**

**7NO 2NC**
**$V_s$ 24 V DC**
**monitored start**

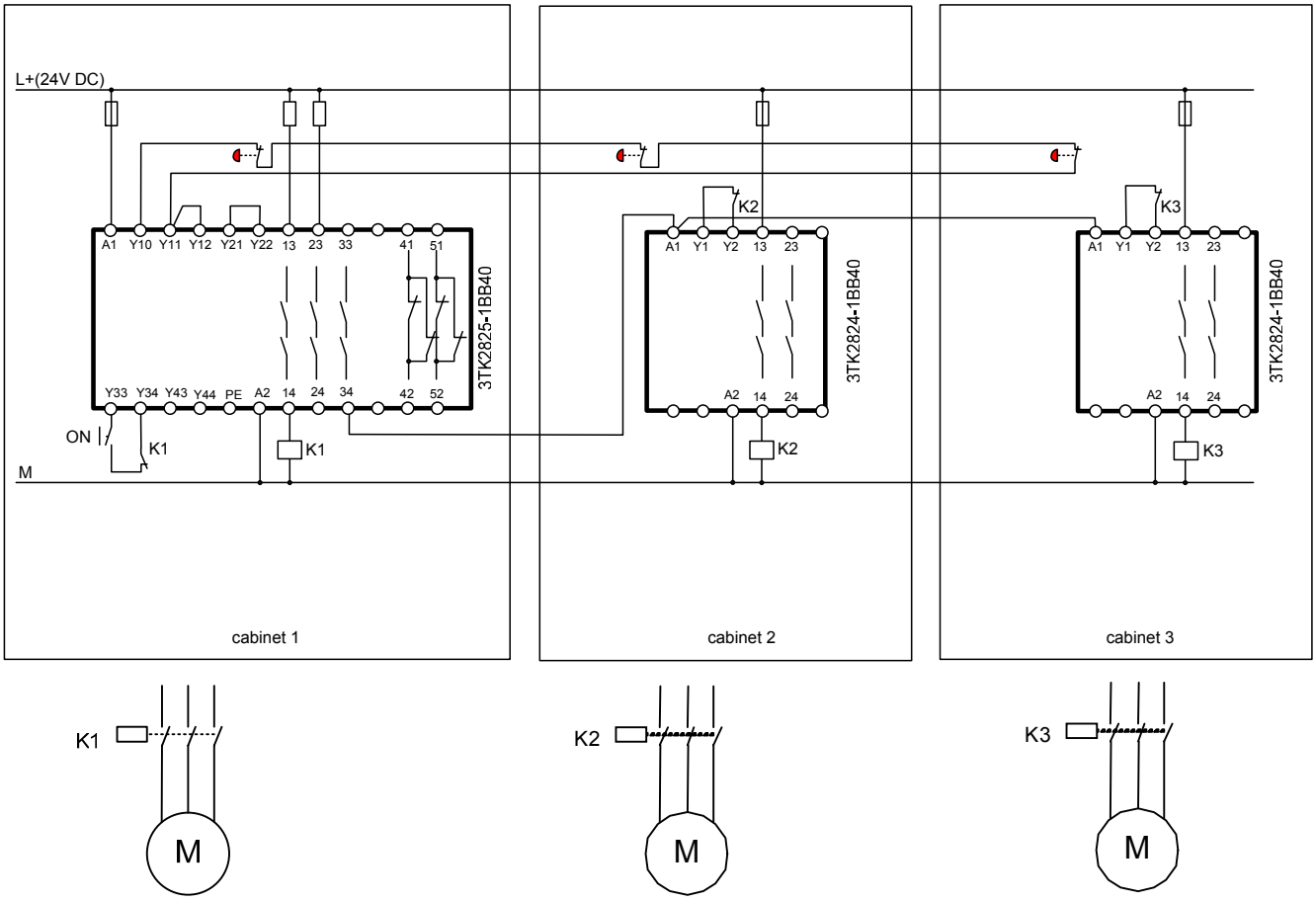


EMERGENCY STOP is monitored by a 3TK2825; the 3TK28 monitors the actuators in the same control cabinet. Always control the subsequent safety devices from the same, first safety device. The reason for this is that when several safety relays are used in series, the response times must be added. The 3TK2825 is required in order to maintain, e.g. a total response time of e.g. 200ms.
Only safety-relevant sensors with positively-opening contacts may be used as sensors. Tow actuators (e.g. contactors) should be used in the load circuit.

Sensor cables must be routed so that they are protected; only safety-relevant sensors with positively-opening contacts may be used as sensors.
Using this circuit example, Category 2 according to EN 954-1 can only be fulfilled, if, when the actuator fails, either an alarm is automatically generated or the machine control initiates a safe condition. Otherwise a second shutdown path is required.

| Safety relay | Function | Comments |
|---|---|---|
| **3TK2825 + 3TK2830 + 3TK2825 + 3TK2825** | **Category 4** (acc. EN 954-1)<br>**E-Stop Monitoring**<br>**Stop-Category 0**<br><br>**E-Stop distributed over several cabinets** | **8NO 6NC**<br>**$V_s$ 24 V DC**<br>**monitored start** |



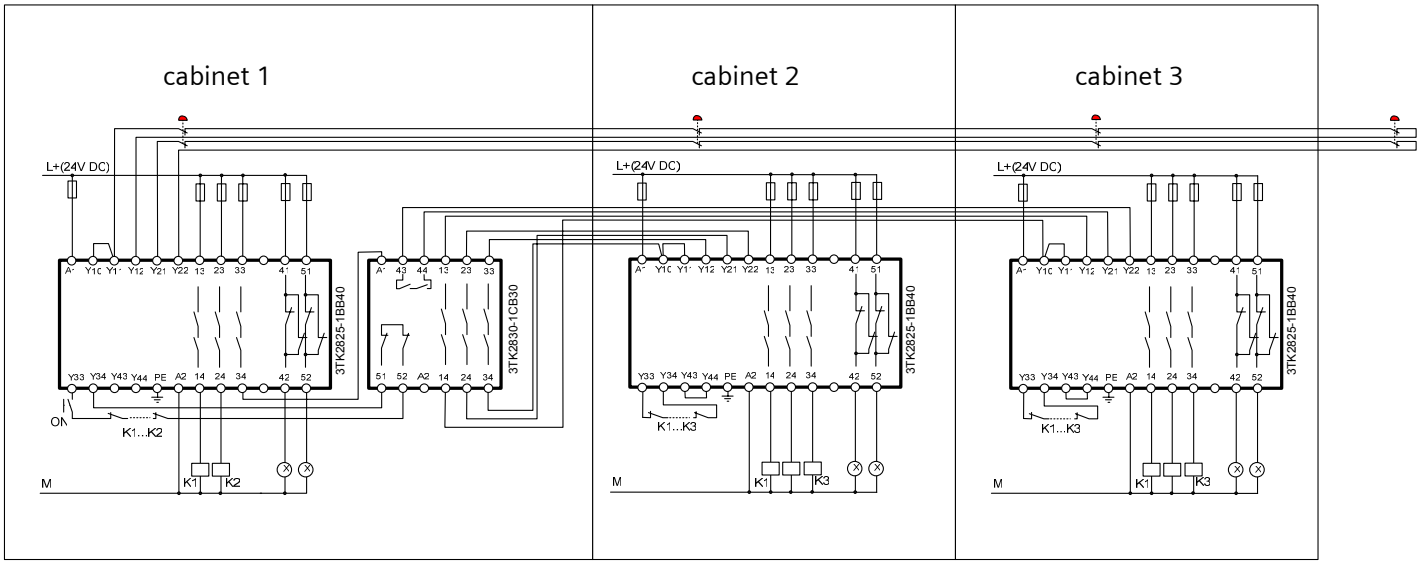


EMERGENCY STOP commanding devices are monitored by the 3TK2825 in cabinet 1: This is the reason that the response times do not have to be added. The actuators are monitored by the 3TK28 in the same control cabinet.

The 3TK2825 in cabinet 1 operates with a monitored start.
The 3TK2825 in cabinets 2 and 3 operate with an automatic start.
For Category 4, several EMERGENCY STOP commanding devices may be connected in series.

Sensor cables must be routed so that they are protected; only safety-relevant sensors with positively-opening contacts may be used as sensors.

1

| | | |
|---|---|---|
| **3TK2827** | **Category 2** (acc. EN 954-1)<br>**E-Stop Monitoring**<br>**Stop-Category 0 and 1** | **2NO 2NOtv 1NC**<br>**Vs 24 V DC**<br>**monitored start** |

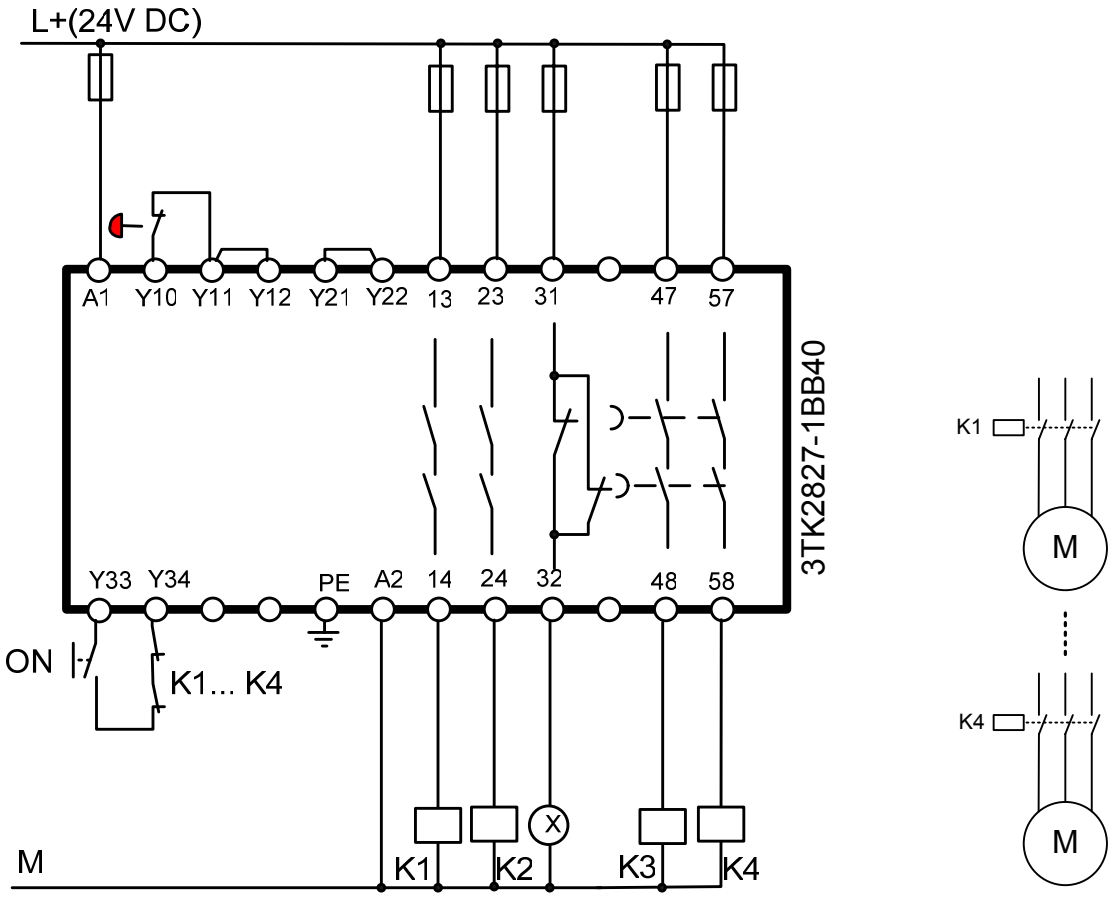


Sensor cables must be routed so that they are protected; only safety-relevant sensors with positively-opening contacts may be used as sensors.
Using this circuit example, Category 2 according to EN 954-1 can only be fulfilled, if, when the actuator fails, either an alarm is automatically generated or the machine control initiates a safe condition. Otherwise a second shutdown path is required.

| | | |
|---|---|---|
| **3TK2827** | **Category 3/4** (acc. EN 954-1)<br>**E-Stop Monitoring**<br>**Stop-Category 0 and 1** | **2NO 2NOtv 1NC**<br>**Vs 24 V DC**<br>**monitored start** |



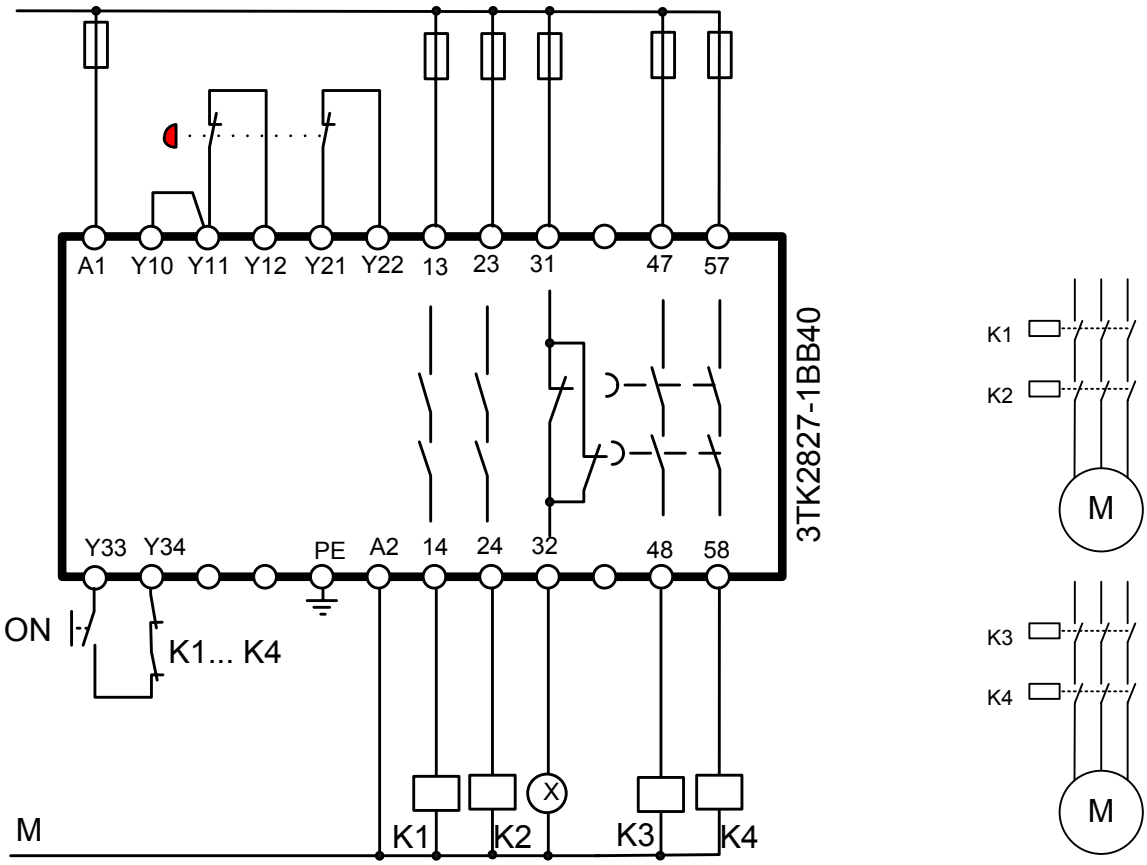


For Category 4, several EMERGENCY STOP commanding devices may be connected in series.

Sensor cables must be routed so that they are protected; only safety-relevant sensors with positively-opening contacts may be used as sensors.
The time-delayed outputs switch according to Category 3 in compliance with EN 954-1.

1

## 3TK2828

**Category 2** (acc. EN 954-1)
**Protective door monitoring**
**Stop-Category 0 and 1**

**2NO 2NOtv 1NC**
**Vs 24 V DC**
**auto start**

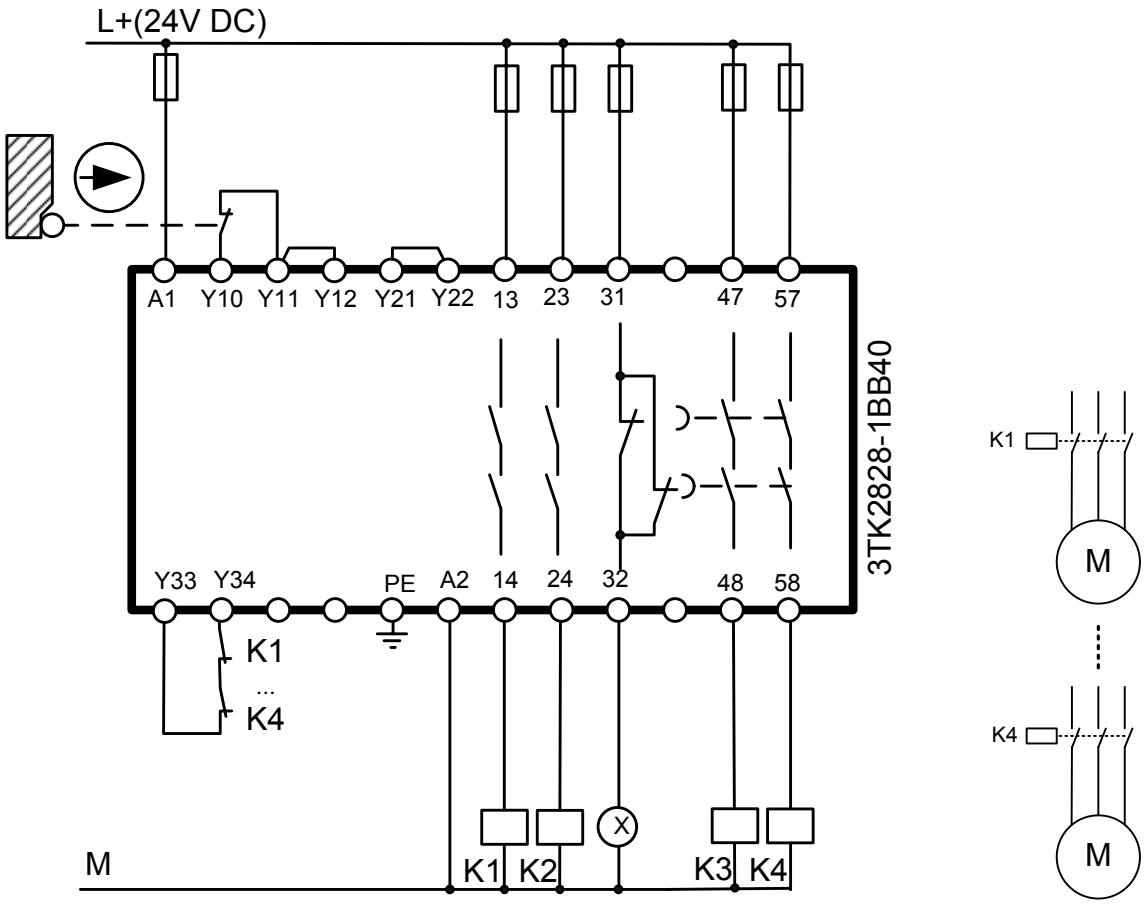


Tow actuators (e.g. contactors) should be used in the load circuit.

Sensor cables must be routed so that they are protected; only safety-relevant sensors with positively-opening contacts may be used as sensors.
Using this circuit example, Category 2 according to EN 954-1 can only be fulfilled, if, when the actuator fails, either an alarm is automatically generated or the machine control initiates a safe condition. Otherwise a second shutdown path is required.

| | | |
|---|---|---|
| **3TK2828** | **Category 3/4** (acc. EN 954-1)<br>**Protective door monitoring**<br>**Stop-Category 0 and 1** | **2NO 2NOtv 1NC**<br>**Vs 24 V DC**<br>**auto start** |



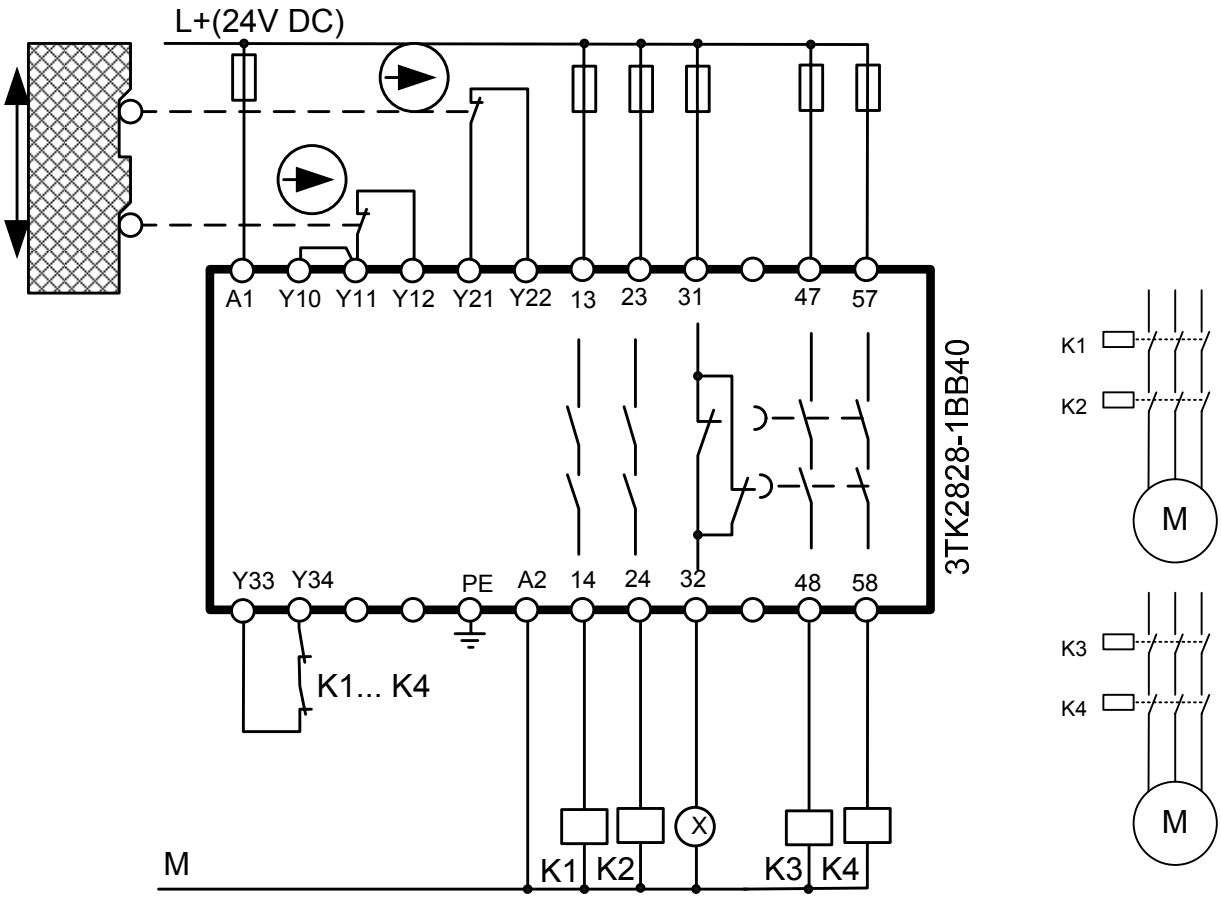


For Category 4, it is not permissible to connect several position switches in series to implement a protective door monitoring function (due to an inadequate level of fault detection).

Sensor cables must be routed so that they are protected; only safety-relevant sensors with positively-opening contacts may be used as sensors.
The time-delayed outputs switch according to Category 3 in compliance with EN 954-1.

| | | | |
|---|---|---|---|
| 1 | **3TK2828 + 3TK2830 + 3TK2830** | **Category 3/4** (acc. EN 954-1)<br>**Protective door monitoring**<br>**Stop-Category 0 and 1** | **4NO 4NOtv 1NC**<br>**Vs 24 V DC**<br>**auto start** |

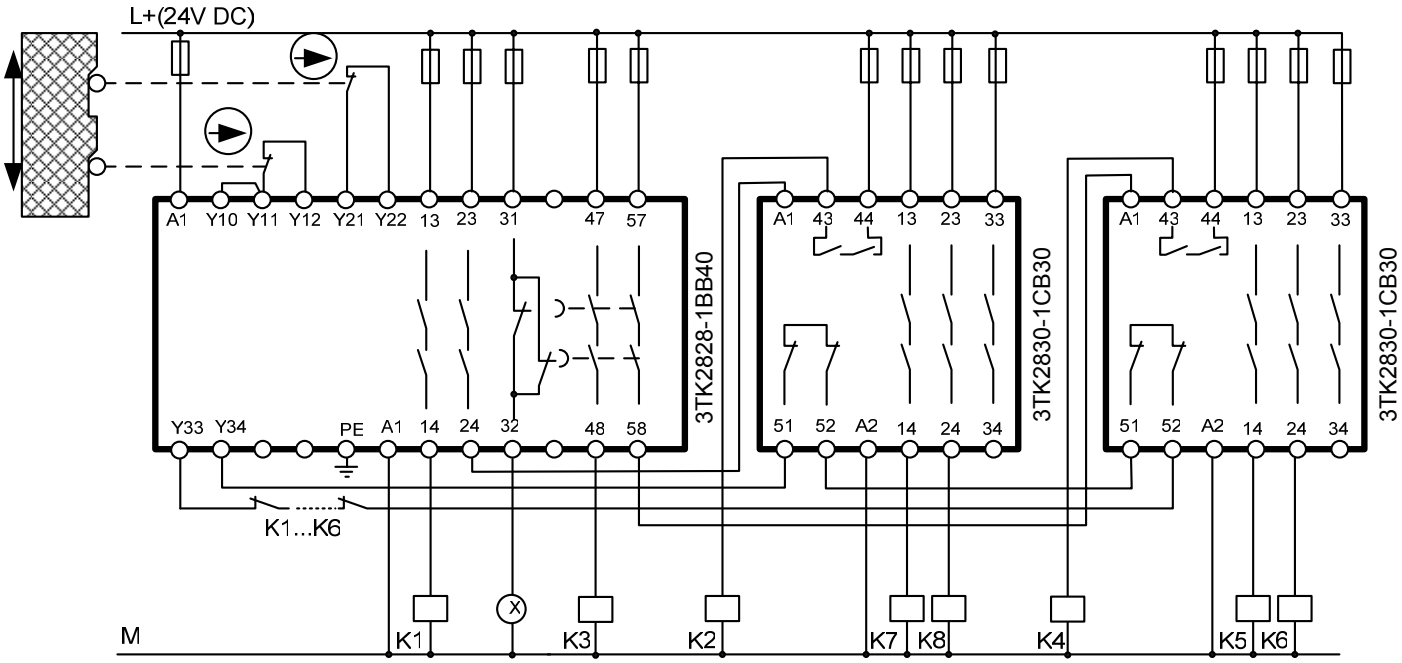


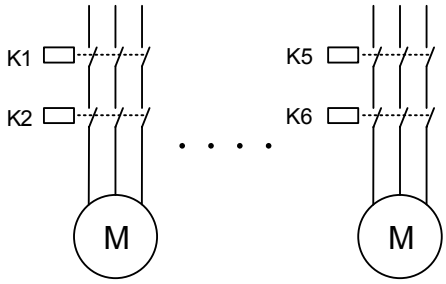


For Category 4, it is not permissible to connect several position switches in series to implement a protective door monitoring function (due to an inadequate level of fault detection). Up to eight 3TK2830 expansion devices may be connected to an FK (enable circuit) of the basic 3TK2821 device.
When several expansion devices are cascaded, the response times must be added.
When circuit faults are excluded – such as a P fault or a M fault – then it is permissible to control an expansion device through one channel (cascading). This condition is always fulfilled within a control cabinet or when connecting cables are routed in a protected fashion.

Sensor cables must be routed so that they are protected; only safety-relevant sensors with positively-opening contacts may be used as sensors.

| | | |
|---|---|---|
| **3TK2834** | **Category 4** (acc. EN 954-1)<br>**Two hand Monitoring**<br>**Stop-Category 0** | **2NO 2NC**<br>**$V_s$ 24 V DC**<br>**two hand operating** |



**Type III C (EN 574)**

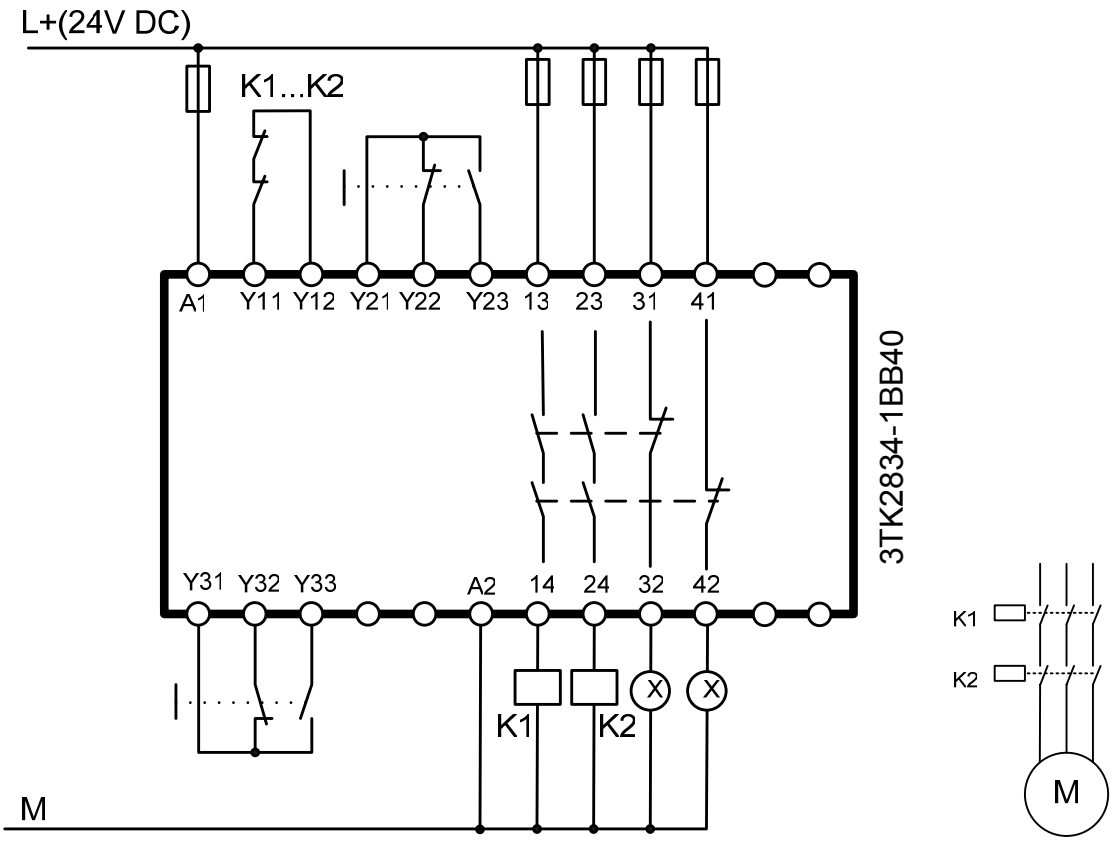


When the pushbuttons are simultaneously actuated within 500 ms then the safety relay is switched-in.

Sensor cables must be routed so that they are protected; only safety-relevant sensors with positively-opening contacts may be used as sensors.

1

## 3TK2834 + 3TK2823

**Category 4** (acc. EN 954-1)
**E-Stop and Two hand**
**Monitoring**
**Stop-Category 0**

**2NO 2NC**
**$V_s$ 24 V DC**
**monitored start**
**two hand operating**

**Type III C (EN 574)**

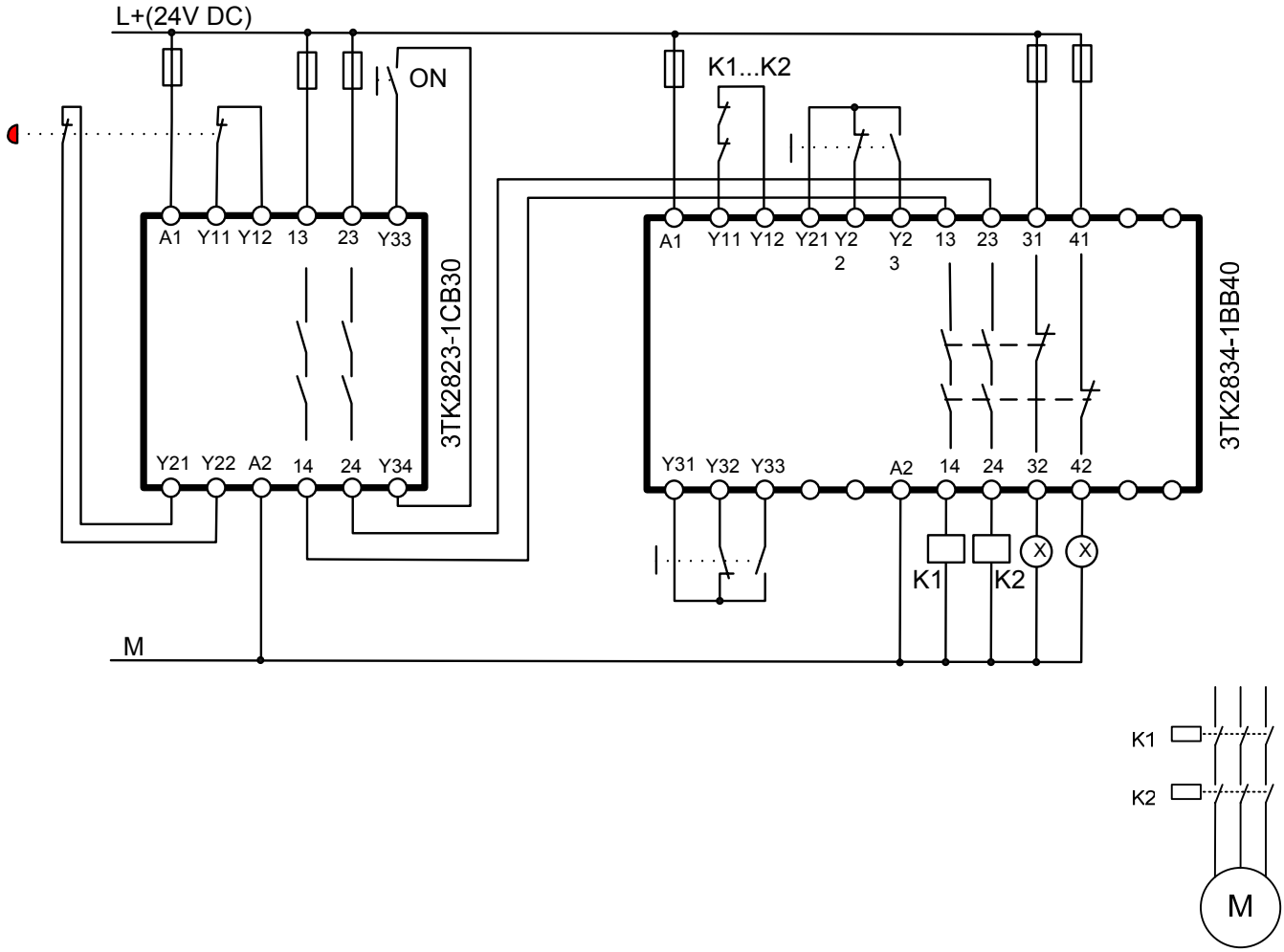


For Category 4, several EMERGENCY STOP commanding devices may be connected in series. When the pushbuttons are simultaneously actuated within 500 ms then the safety relay is switched-in.

Sensor cables must be routed so that they are protected; only safety-relevant sensors with positively-opening contacts may be used as sensors.

| | | |
|---|---|---|
| **3TK2834** | **Category 4** (acc. EN 954-1)<br>**E-Stop and Two hand Monitoring**<br>**Stop-Category 0** | **2NO 2NC**<br>**$V_s$ 24 V DC**<br>**monitored start**<br>**two hand operating** |

**Type III C (EN 574)**

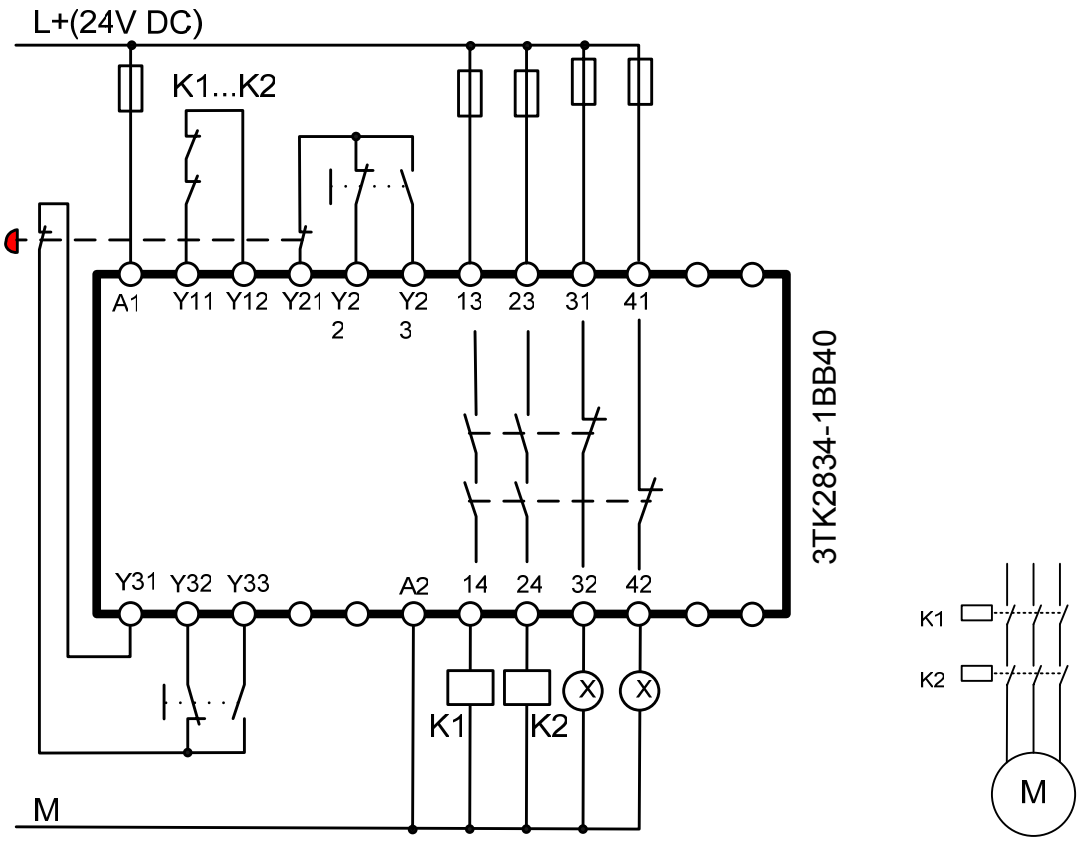


For Category 4, several EMERGENCY STOP commanding devices may be connected in series.
Two hand operating with E-STOP Monitoring.
When the pushbuttons are simultaneously actuated within 500 ms then the safety relay is switched-in.

Sensor cables must be routed so that they are protected; only safety-relevant sensors with positively-opening contacts may be used as sensors.

1

## 3TK2834 + 3TK2835

**Category 4 (acc. EN 954-1)**
**Two hand Monitoring with run-on distance check**
**Stop-Category 0**

**2NO 2NC**
**$V_s$ 24 V DC**
**two hand operating**

**Type III C (EN 574)**

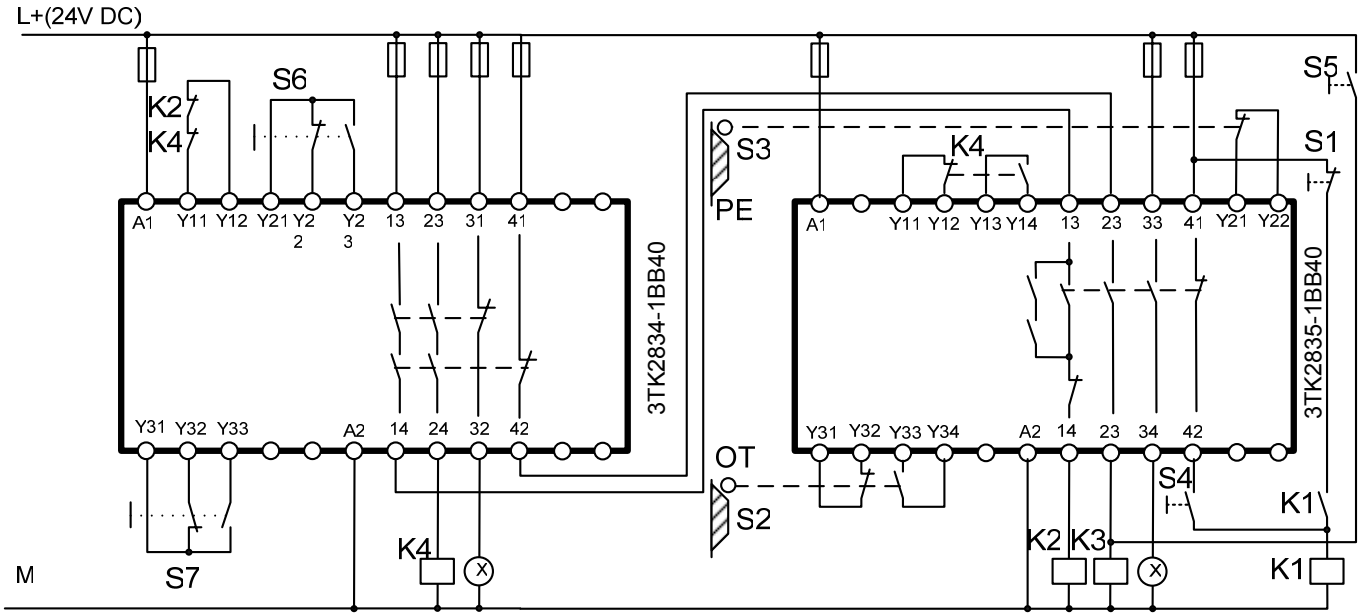


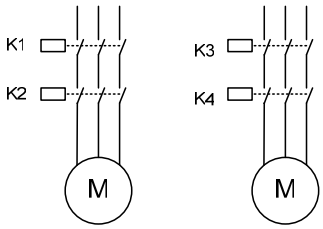


When the pushbuttons are simultaneously actuated within 500 ms then the safety relay is switched-in.

Sensor cables must be routed so that they are protected; only safety-relevant sensors with positively-opening contacts may be used as sensors.

# 3TK284.

# Safety relays with electronic outputs

| | | |
|---|---|---|
| **3TK2840** | **Category 2** (acc. EN 954-1)<br>**E-Stop Monitoring**<br>**Stop-Category 0** | **2NO$_{el.}$**<br>**V$_s$ 24 V DC**<br>**monitored start** |

2

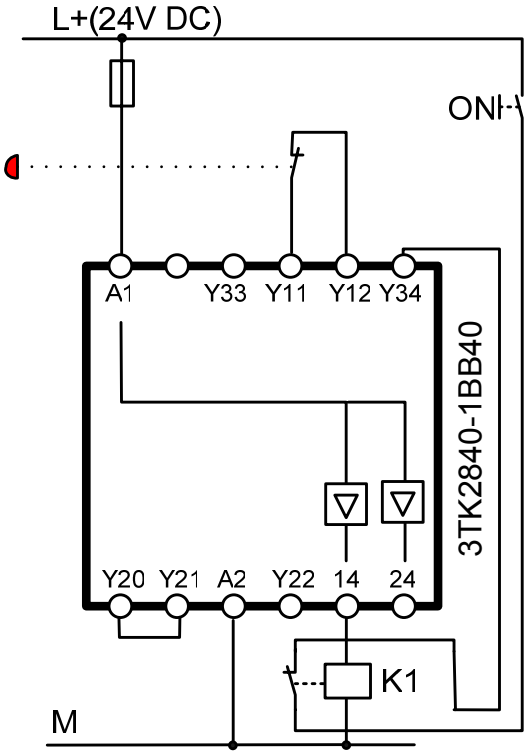


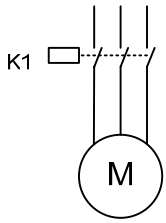


The output drivers (S$_{el}$) are only monitored via the external actuators – i.e. using the feedback circuit (Y34). This is the reason that this device may only be used in conjunction with positively-driven actuators.
Only safety-relevant sensors with positively-opening contacts may be used as sensors.

Sensor cables must be routed so that they are protected; only safety-relevant sensors with positively-opening contacts may be used as sensors.

| | | |
|---|---|---|
| **3TK2840** | **Category 3** (acc. EN 954-1)<br>**E-Stop Monitoring**<br>**Stop-Category 0** | **2NO$_{el.}$**<br>**V$_s$ 24 V DC**<br>**monitored start** |



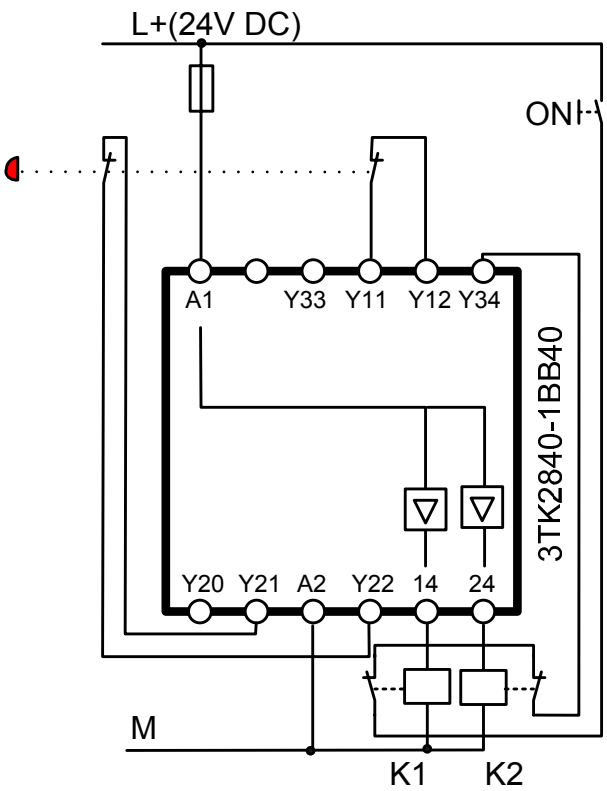


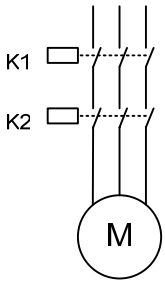


The output drivers (S$_{el}$) are only monitored via the external actuators – i.e. using the feedback circuit (Y34). This is the reason that this device may only be used in conjunction with positively-driven actuators.
For Category 4, several EMERGENCY STOP commanding devices may be connected in series.

Sensor cables must be routed so that they are protected; only safety-relevant sensors with positively-opening contacts may be used as sensors.

| | | |
|---|---|---|
| **3TK2840** | **Category 2** (acc. EN 954-1)<br>**protective door**<br>**Monitoring**<br>**Stop-Category 0** | **2NO$_{el.}$**<br>**$V_s$ 24 V DC**<br>**auto start** |

2

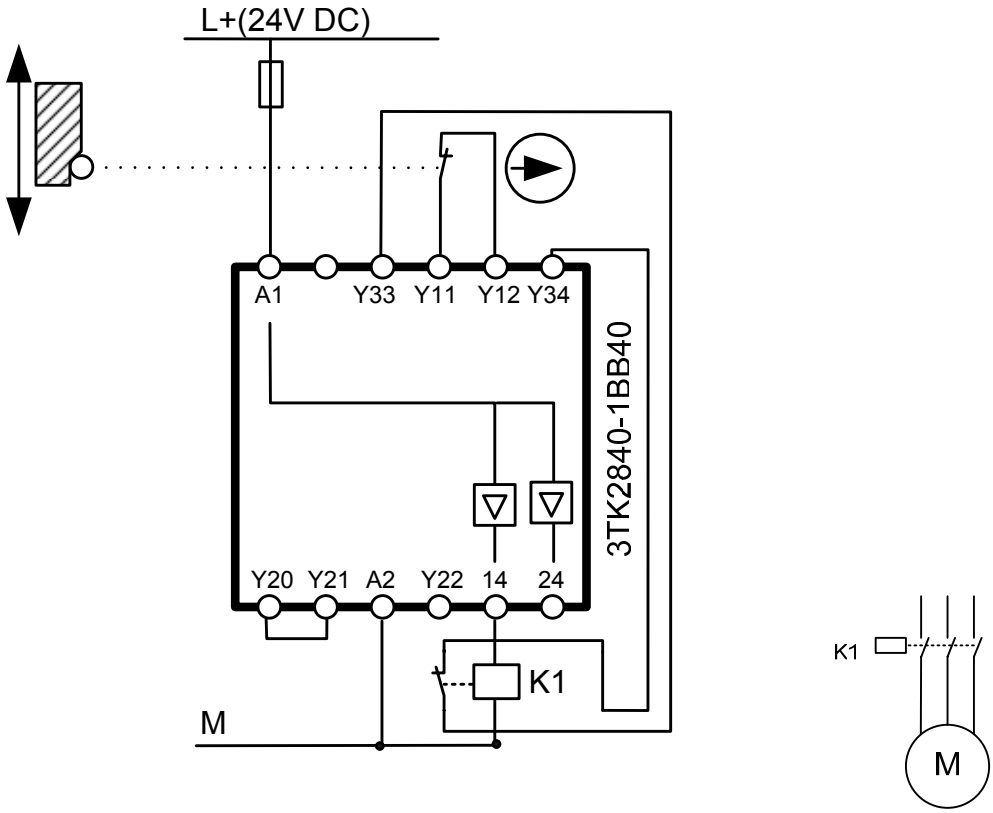


The output drivers ($S_{el}$) are only monitored via the external actuators – i.e. using the feedback circuit (Y34). This is the reason that this device may only be used in conjunction with positively-driven actuators.

Sensor cables must be routed so that they are protected; only safety-relevant sensors with positively-opening contacts may be used as sensors.
Using this circuit example, Category 2 according to EN 954-1 can only be fulfilled, if, when the actuator fails, either an alarm is automatically generated or the machine control initiates a safe condition. Otherwise a second shutdown path is required.

| | | |
|---|---|---|
| **3TK2840** | **Category 3** (acc. EN 954-1)<br>**protective door**<br>**Monitoring**<br>**Stop-Category 0** | **2NO$_{el.}$**<br>**$V_s$ 24 V DC**<br>**auto start** |



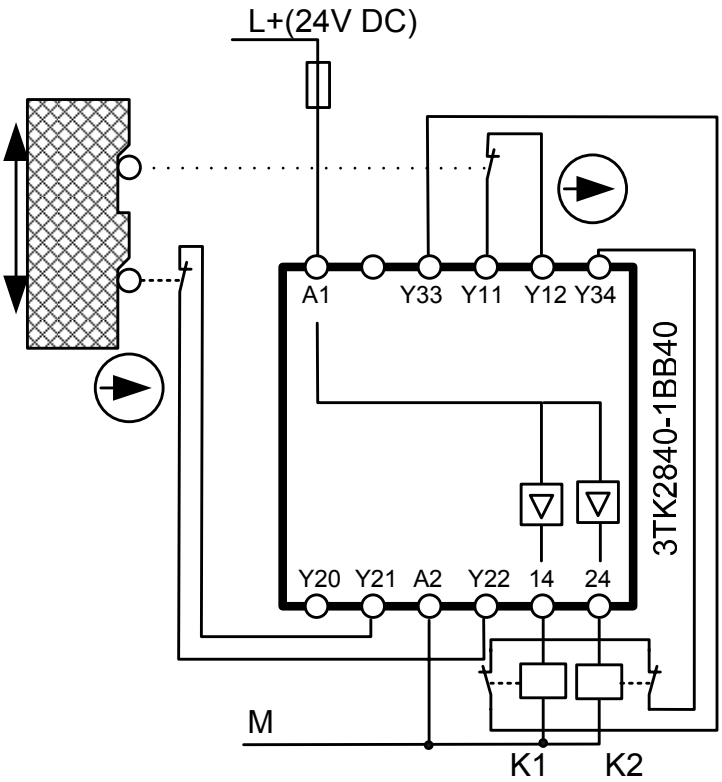


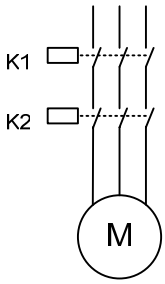


The output drivers ($S_{el}$) are only monitored via the external actuators – i.e. using the feedback circuit (Y34). This is the reason that this device may only be used in conjunction with positively-driven actuators.
For Category 4, it is not permissible to connect several position switches in series to implement a protective door monitoring function (due to an inadequate level of fault detection).

Sensor cables must be routed so that they are protected; only safety-relevant sensors with positively-opening contacts may be used as sensors.

| Safety relay | Function | Comments |
|---|---|---|
| **3TK2840 + 3TK2830 + 3TK2830** | **Category 2** (acc. EN 954-1)<br>**protective door**<br>**Monitoring**<br>**Stop-Category 0** | **8NO**<br>**$V_s$ 24 V DC**<br>**auto start** |

2

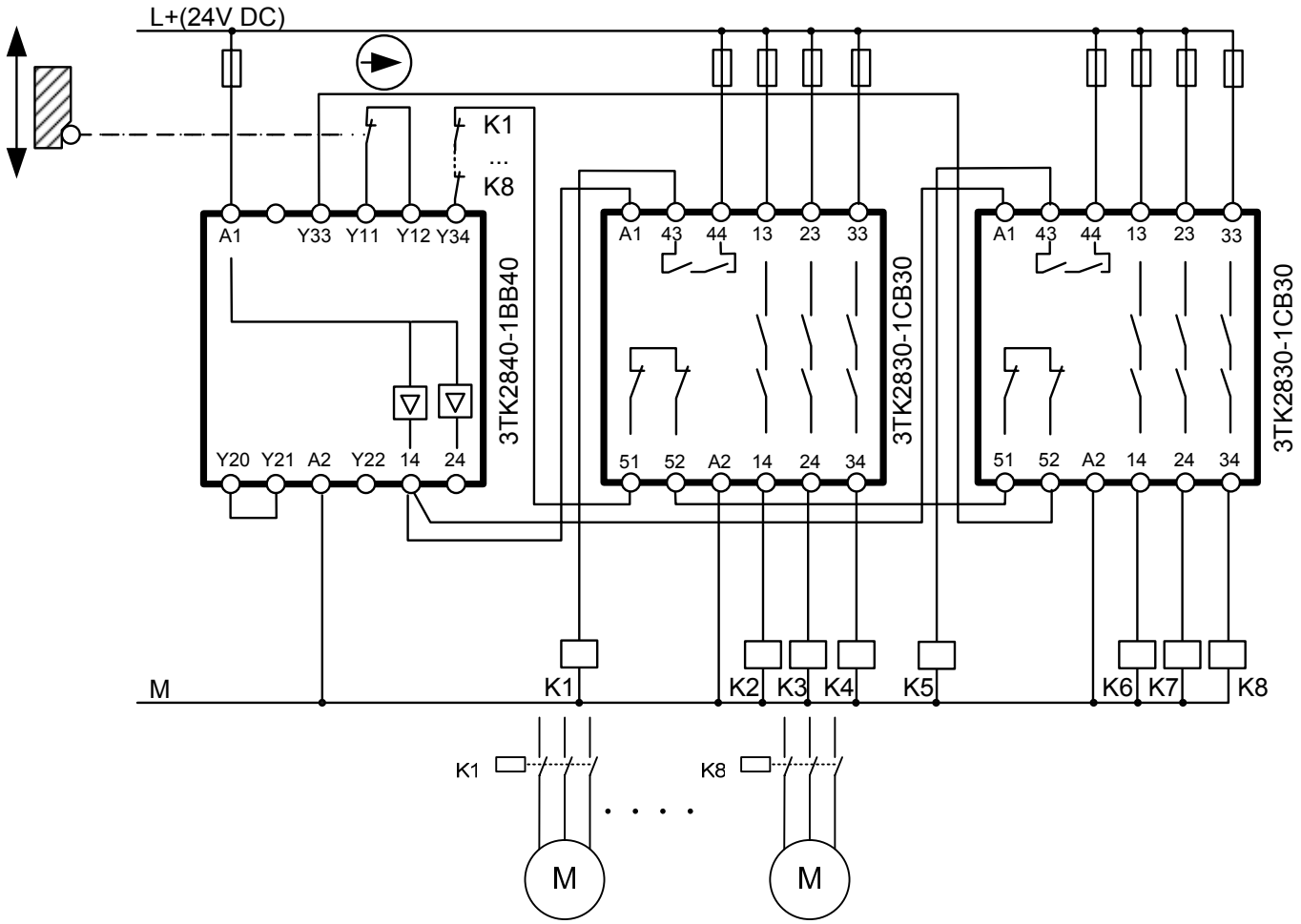


The output drivers ($S_{el}$) are only monitored via the external actuators – i.e. using the feedback circuit (Y34). This is the reason that this device may only be used in conjunction with positively-driven actuators.

Sensor cables must be routed so that they are protected; only safety-relevant sensors with positively-opening contacts may be used as sensors.
Using this circuit example, Category 2 according to EN 954-1 can only be fulfilled, if, when the actuator fails, either an alarm is automatically generated or the machine control initiates a safe condition. Otherwise a second shutdown path is required.

| | | |
|---|---|---|
| **3TK2840** | **Category 3** (acc. EN 954-1)<br>**Magnet sensor Monitoring**<br>**Stop-Category 0** | **2NO$_{el.}$**<br>**V$_s$ 24 V DC**<br>**auto start** |



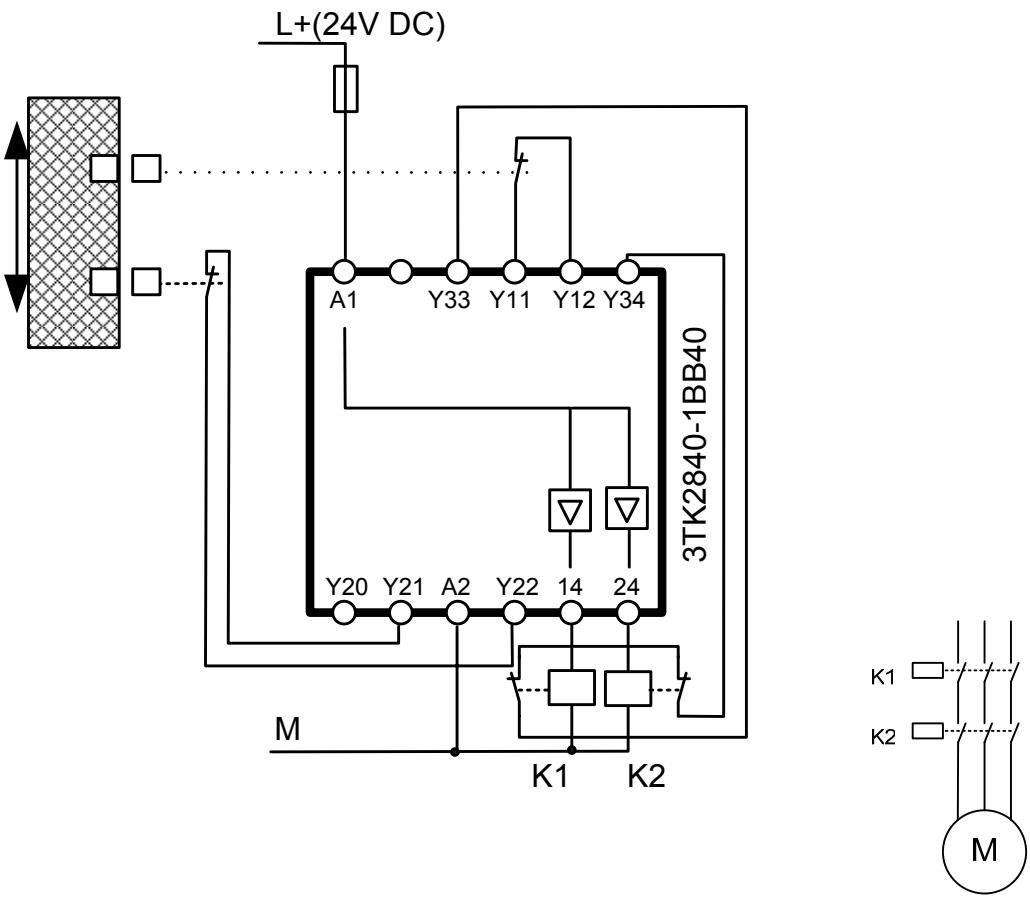


The output drivers ($S_{el}$) are only monitored via the external actuators – i.e. using the feedback circuit (Y34). This is the reason that this device may only be used in conjunction with positively-driven actuators.

Sensor cables must be routed so that they are protected; only safety-relevant sensors with positively-opening contacts may be used as sensors.
Using this circuit example, Category 2 according to EN 954-1 can only be fulfilled, if, when the actuator fails, either an alarm is automatically generated or the machine control initiates a safe condition. Otherwise a second shutdown path is required.

| | | |
|---|---|---|
| **3TK2841** | **Category 2** (acc. EN 954-1)<br>**E-Stop Monitoring**<br>**Stop-Category 0** | **2NO$_{el}$**<br>**V$_s$ 24 V DC**<br>**monitored start** |

2

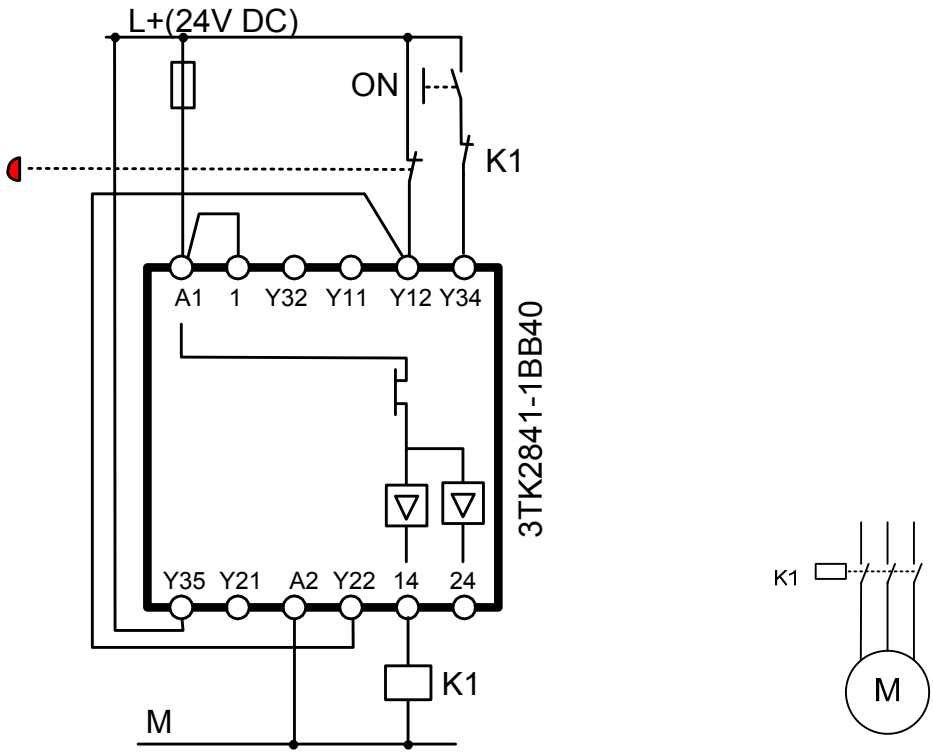


Sensor cables must be routed so that they are protected; only safety-relevant sensors with positively-opening contacts may be used as sensors.
Using this circuit example, Category 2 according to EN 954-1 can only be fulfilled, if, when the actuator fails, either an alarm is automatically generated or the machine control initiates a safe condition. Otherwise a second shutdown path is required.

| | | |
|---|---|---|
| **3TK2841** | **Category 4** (acc. EN 954-1)<br>**E-Stop Monitoring**<br>**Stop-Category 0** | **2NO$_{el}$**<br>**V$_s$ 24 V DC**<br>**monitored start** |



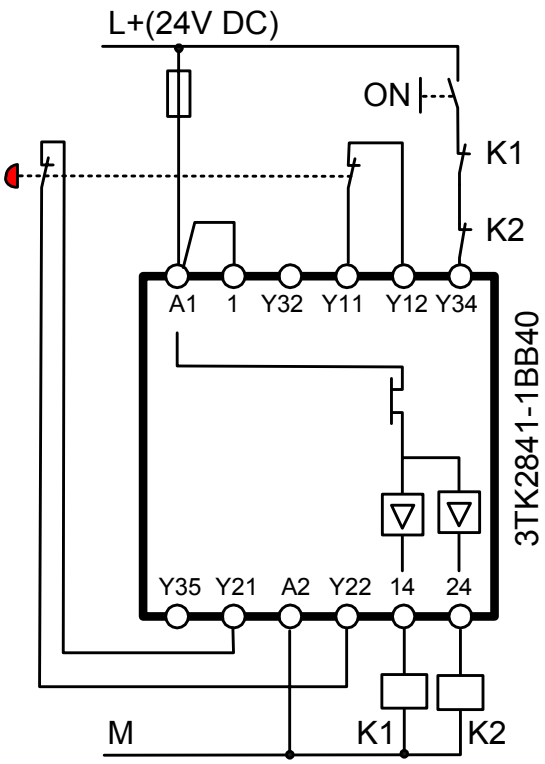


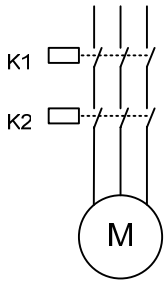


For Category 4, several EMERGENCY STOP commanding devices may be connected in series.

Sensor cables must be routed so that they are protected; only safety-relevant sensors with positively-opening contacts may be used as sensors.

| | | |
|---|---|---|
| **3TK2841** | **Category 2** (acc. EN 954-1)<br>**protective door**<br>**Monitoring**<br>**Stop-Category 0** | **2NO$_{el}$**<br>**V$_s$ 24 V DC**<br>**auto start** |

2

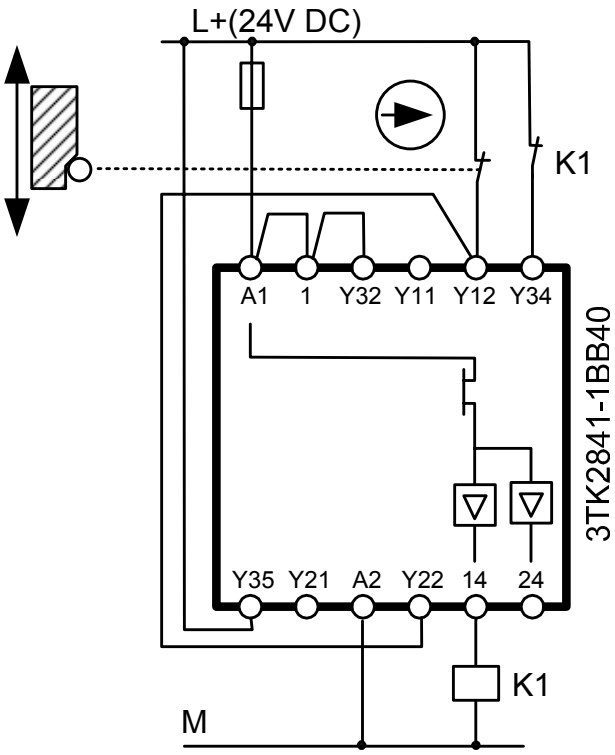


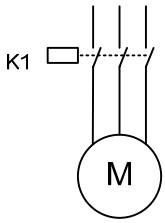


Sensor cables must be routed so that they are protected; only safety-relevant sensors with positively-opening contacts may be used as sensors.
Using this circuit example, Category 2 according to EN 954-1 can only be fulfilled, if, when the actuator fails, either an alarm is automatically generated or the machine control initiates a safe condition. Otherwise a second shutdown path is required.

| | | |
|---|---|---|
| **3TK2841** | **Category 4** (acc. EN 954-1)<br>**protective door**<br>**Monitoring**<br>**Stop-Category 0** | **2NO$_{el}$**<br>**V$_s$ 24 V DC**<br>**auto start** |



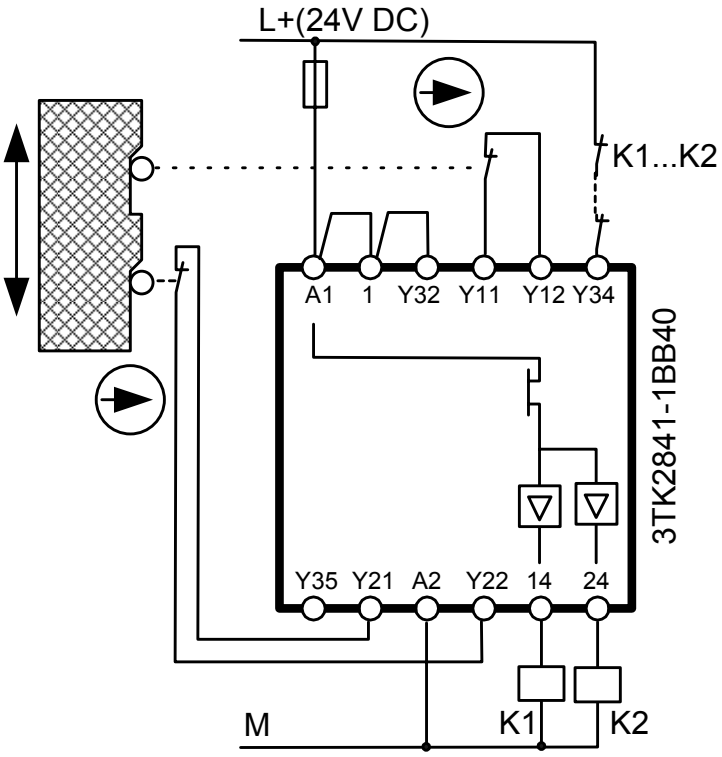


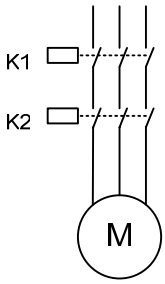


For Category 4, it is not permissible to connect several position switches in series to implement a protective door monitoring function (due to an inadequate level of fault detection).

Sensor cables must be routed so that they are protected; only safety-relevant sensors with positively-opening contacts may be used as sensors.

| | | |
|---|---|---|
| **3TK2841** | **Category 4** (acc. EN 954-1)<br>**Magnet sensor Monitoring**<br>**Stop-Category 0** | **2NO**el.<br>**Vs 24 V DC**<br>**auto start** |

2

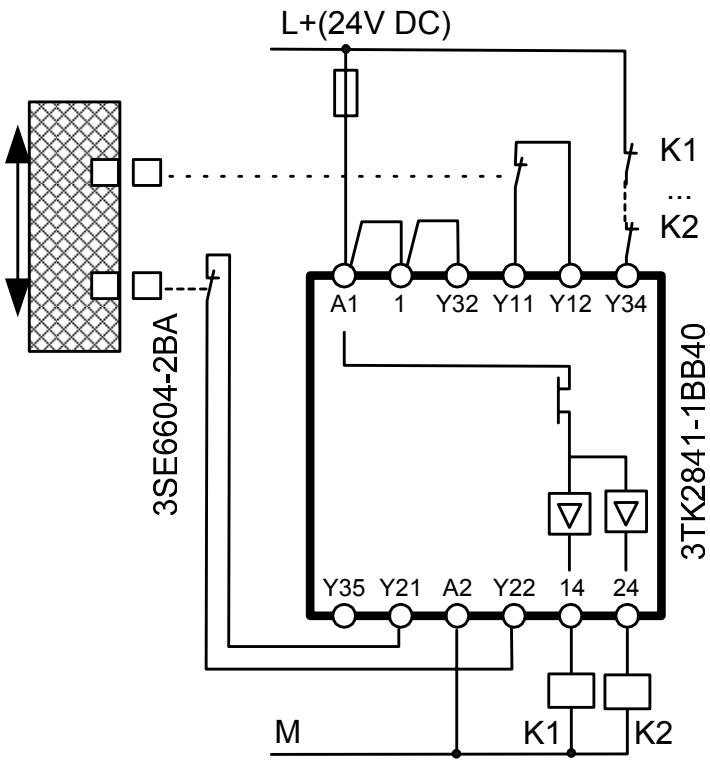


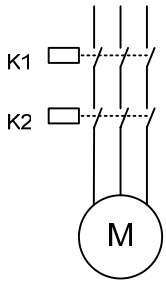


Sensor cables must be routed so that they are protected; only safety-relevant sensors with positively-opening contacts may be used as sensors.

| | | |
|---|---|---|
| **3TK2841** | **Category 4** (acc. EN 954-1)<br>**Light grid Monitoring**<br>**Stop-Category 0** | **2NOel.**<br>**Vs 24 V DC**<br>**auto start** |

Light grid

Type 4 (EN 61496-1)



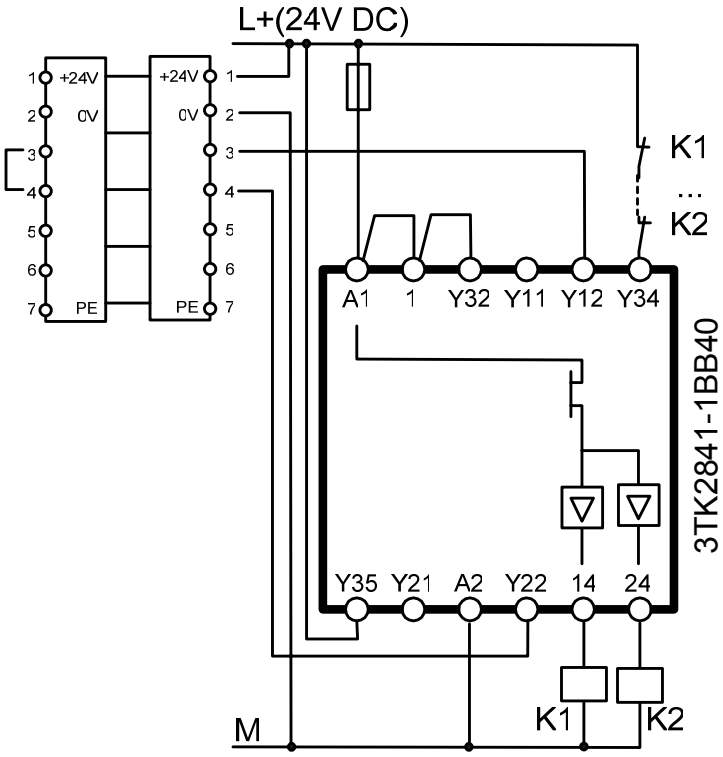


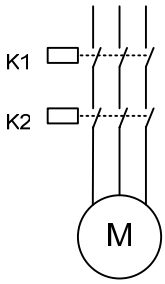


Sensor cables must be routed so that they are protected; only safety-relevant sensors with positively-opening contacts may be used as sensors.

| | | |
|---|---|---|
| **3TK2841** | **Category 3** (acc. EN 954-1)<br>**safety mat Monitoring**<br>**Stop-Category 0** | **2NOel.**<br>**Vs 24 V DC**<br>**auto start** |

2

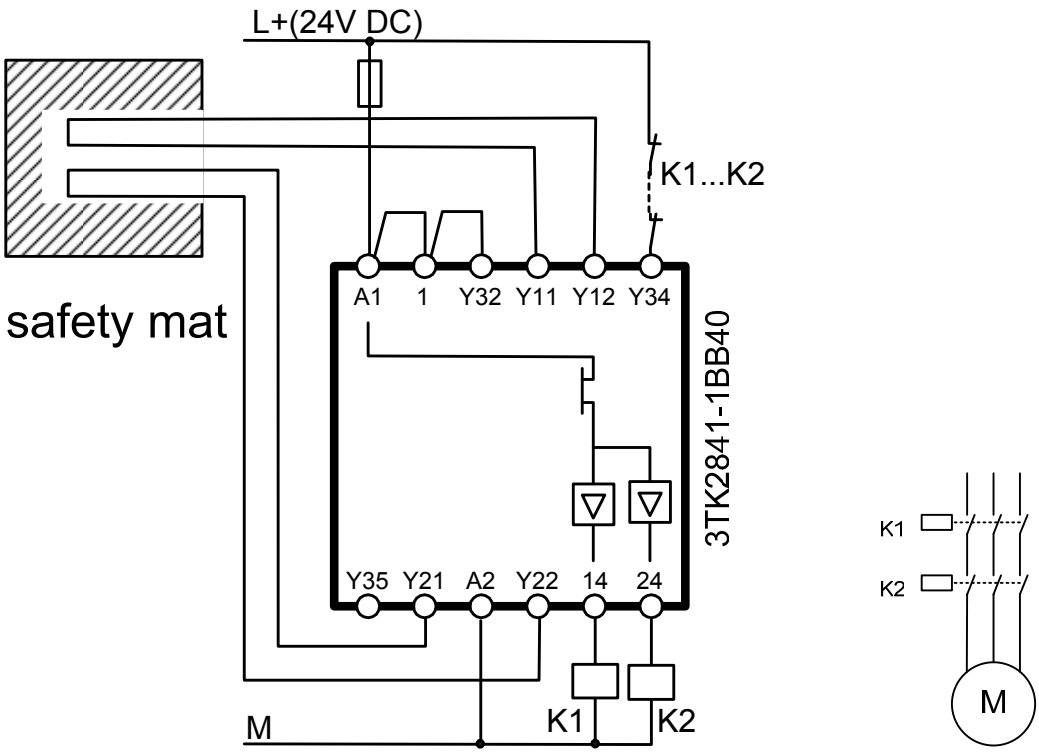


Category 3 according to EN 954-1 of this circuit is as a result of the safety mat.

Sensor cables must be routed so that they are protected; only safety-relevant sensors with positively-opening contacts may be used as sensors.

| Safety relay | Function | Comments |
|---|---|---|
| **3TK2841 + 3TK2830** | **Category 4** (acc. EN 954-1)<br>**protective door**<br>**Monitoring**<br>**Stop-Category 0** | **2NO$_{el}$ 5NC 1 signal lamp**<br>**V$_s$ 24 V DC**<br>**auto start** |



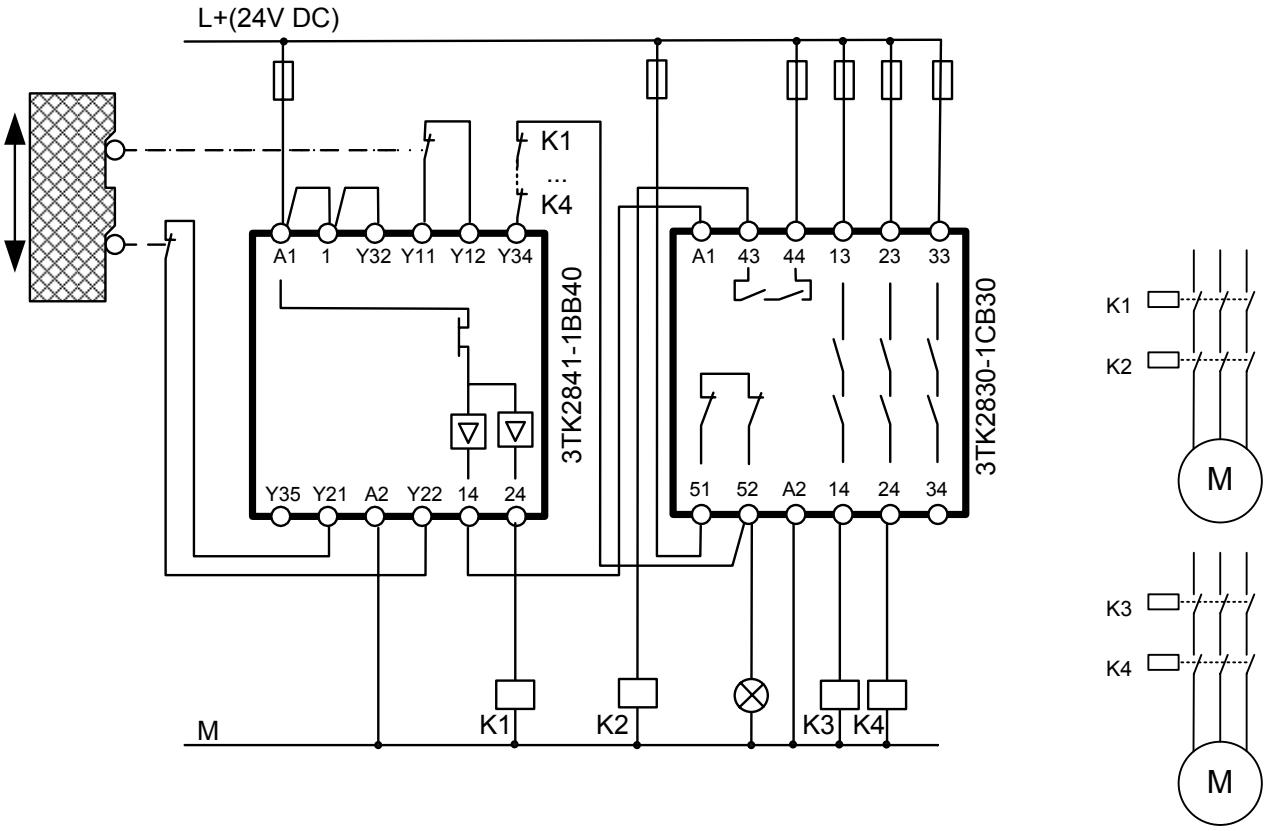


For Category 4, it is not permissible to connect several position switches in series to implement a protective door monitoring function (due to an inadequate level of fault detection).

Sensor cables must be routed so that they are protected; only safety-relevant sensors with positively-opening contacts may be used as sensors.

| Safety relay | Function | Comments |
|---|---|---|
| **3TK2841 + 3TK2830 + 3TK2830** | **Category 4** (acc. EN 954-1)<br>**protective door**<br>**Monitoring**<br>**Stop-Category 0** | **2NO$_{el}$ 6NO**<br>**V$_s$ 24 V DC**<br>**auto start** |

2

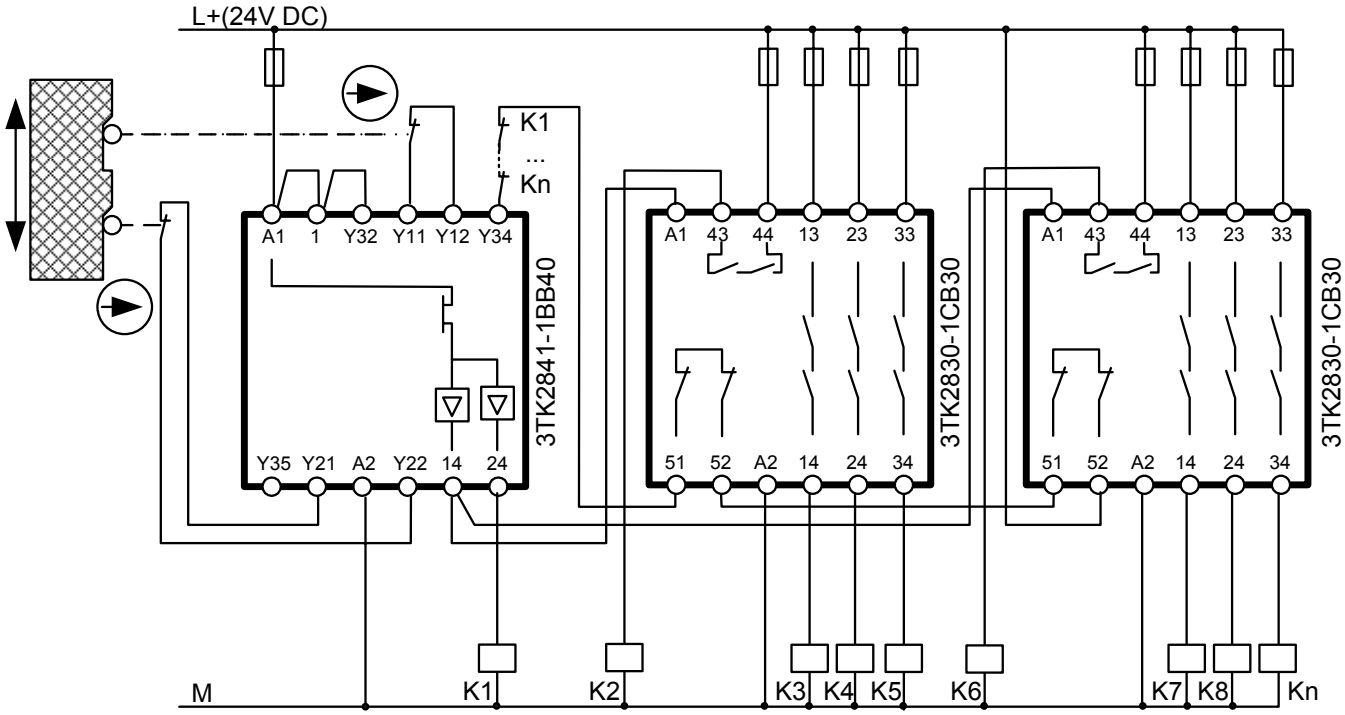


For Category 4, it is not permissible to connect several position switches in series to implement a protective door monitoring function (due to an inadequate level of fault detection).

Sensor cables must be routed so that they are protected; only safety-relevant sensors with positively-opening contacts may be used as sensors.

| Safety relay | Function | Comments |
|---|---|---|
| **3TK2841 + 3TK2856** | **Category 4** (acc. EN 954-1)<br>**E-Stop Monitoring**<br>**Stop-Category 0** | **2NOel 6NO 1NC**<br>**Vs 24 V DC**<br>**monitored Start** |



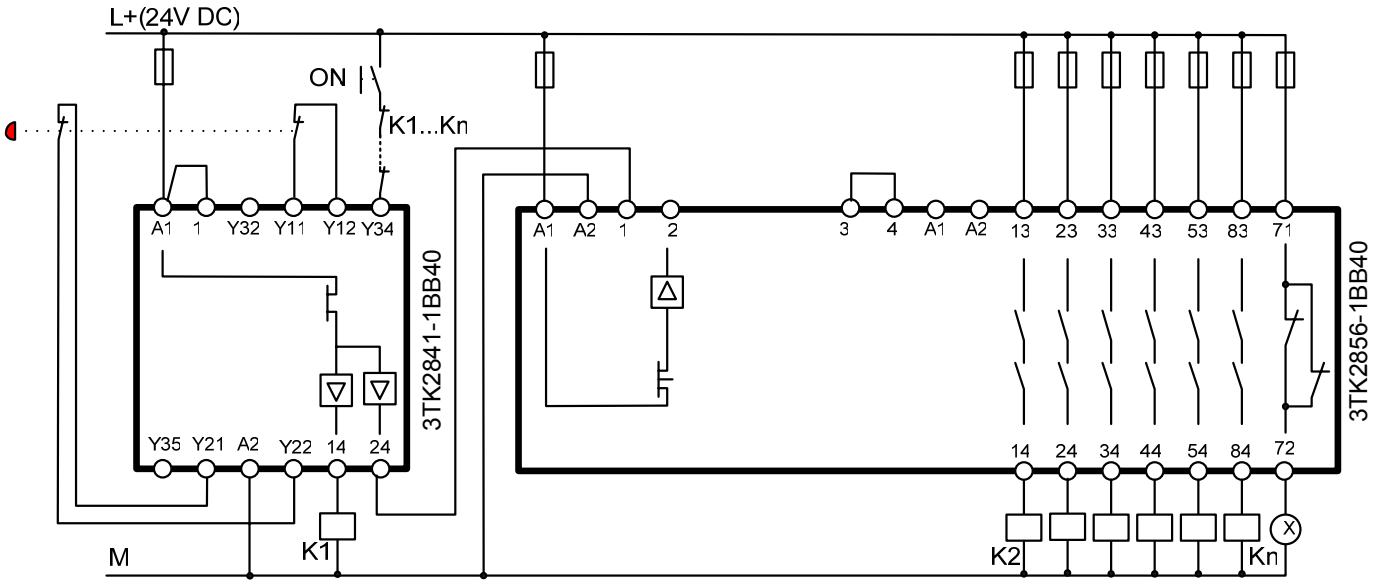


For Category 4, several EMERGENCY STOP commanding devices may be connected in series.

Sensor cables must be routed so that they are protected; only safety-relevant sensors with positively-opening contacts may be used as sensors.

| Safety relay | Function | Comments |
|---|---|---|
| **3TK2841 + 3TK2856** | **Category 4** (acc. EN 954-1)<br>**protective door**<br>**Monitoring**<br>**Stop-Category 0** | **2NOel 6NO 1NC**<br>**Vs 24 V DC**<br>**auto start** |

2

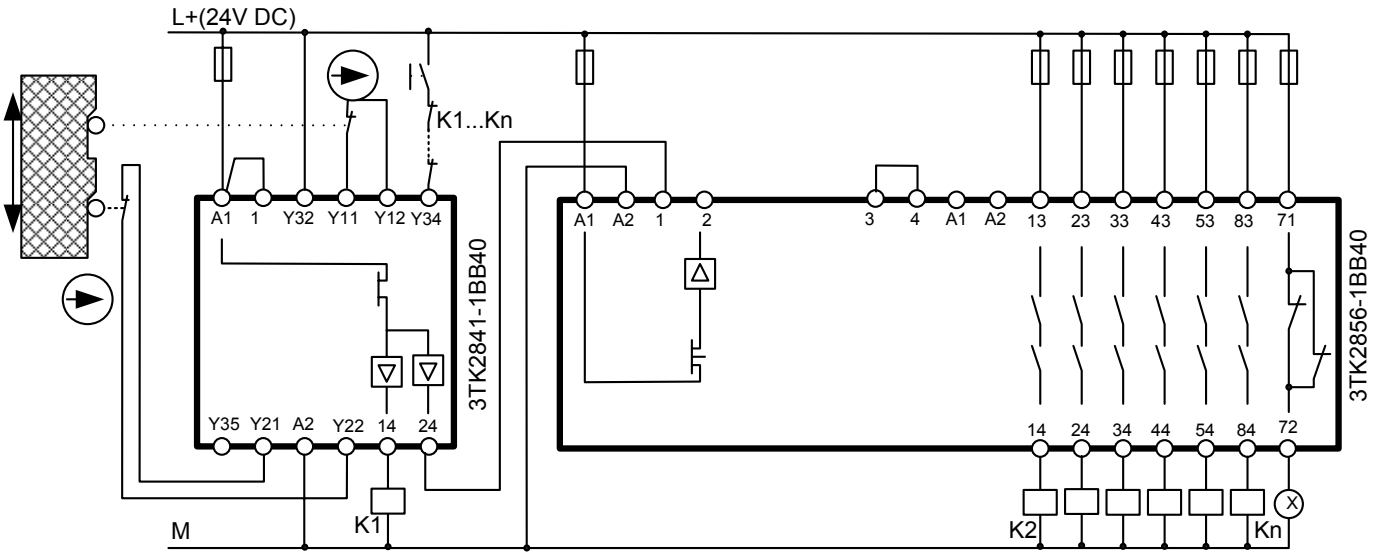


For Category 4, it is not permissible to connect several position switches in series to implement a protective door monitoring function (due to an inadequate level of fault detection).

Sensor cables must be routed so that they are protected; only safety-relevant sensors with positively-opening contacts may be used as sensors.

| | | |
|---|---|---|
| **3TK2841 + 3TK2857** | **Category 4** (acc. EN 954-1)<br>**protective door**<br>**Monitoring**<br>**Stop-Category 0 and 1** | **$2NO_{el}$ $3NO_{tv}$**<br>**$V_s$ 24 V DC**<br>**auto start** |



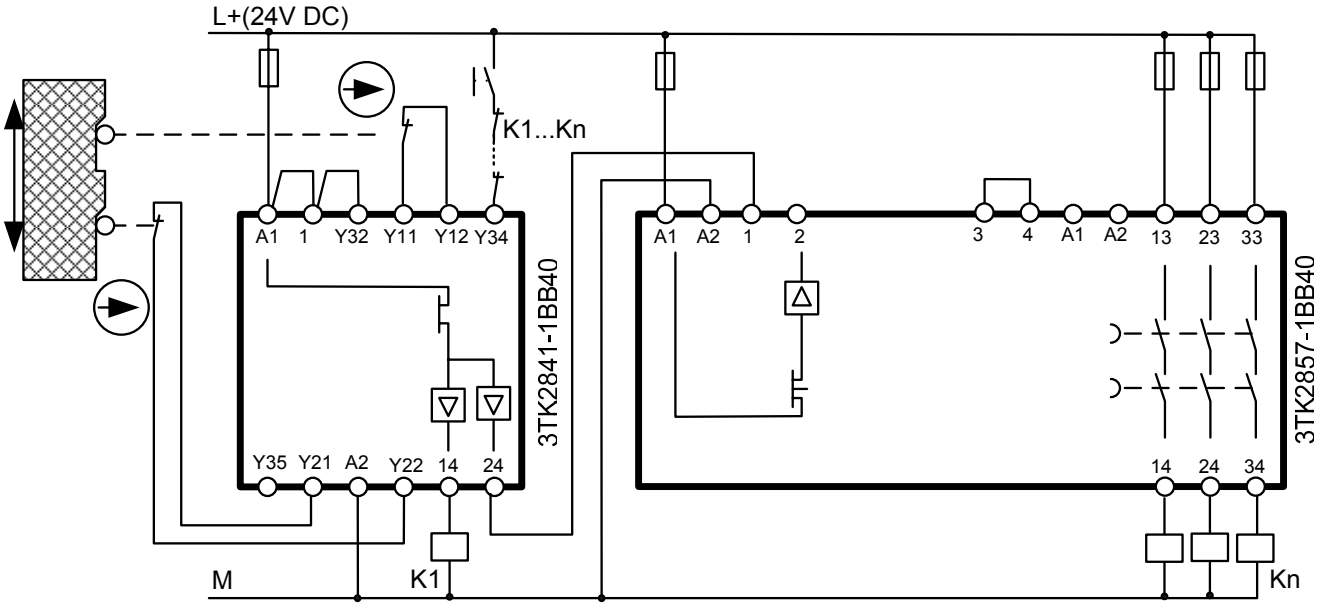


For Category 4, it is not permissible to connect several position switches in series to implement a protective door monitoring function (due to an inadequate level of fault detection).

Sensor cables must be routed so that they are protected; only safety-relevant sensors with positively-opening contacts may be used as sensors.

| Safety relay | Function | Comments |
|---|---|---|
| **3TK2841 + 3TK2841 + 3TK2841** | **Category 2** (acc. EN 954-1)<br>**E-Stop Monitoring**<br>**Stop-Category 0**<br><br>**3 Switchboards**<br>**3 E-Stop**<br>**When an E-Stop button is pressed, all of the 3TK28 devices in the switchboard shut down.** | **6NO$_{el}$**<br>**$V_s$ 24 V DC**<br>**monitored start** |

2

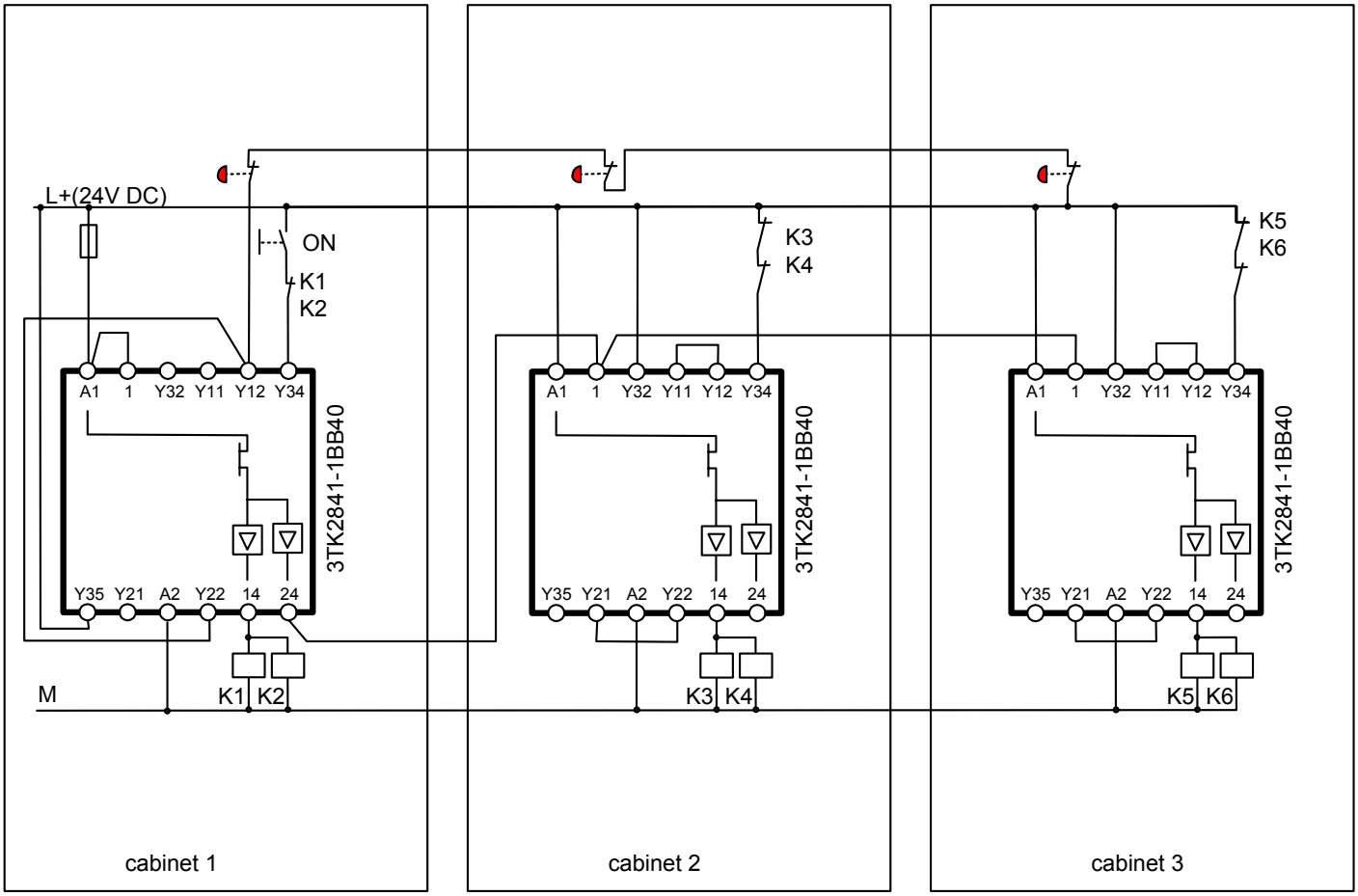


Sensor cables must be routed so that they are protected; only safety-relevant sensors with positively-opening contacts may be used as sensors.
Using this circuit example, Category 2 according to EN 954-1 can only be fulfilled, if, when the actuator fails, either an alarm is automatically generated or the machine control initiates a safe condition. Otherwise a second shutdown path is required.

| Safety relay | Function | Comments |
|---|---|---|
| **3TK2841 + 3TK2841 + 3TK2841** | **Category 4** (acc. EN 954-1)<br>**E-Stop Monitoring**<br>**Stop-Category 0**<br><br>**3 Switchboards**<br>**3 E-Stop**<br>**When an E-Stop button is pressed, all of the 3TK28 devices in the switchboard shut down.** | **6NOel**<br>**Vs 24 V DC**<br>**monitored start** |

2

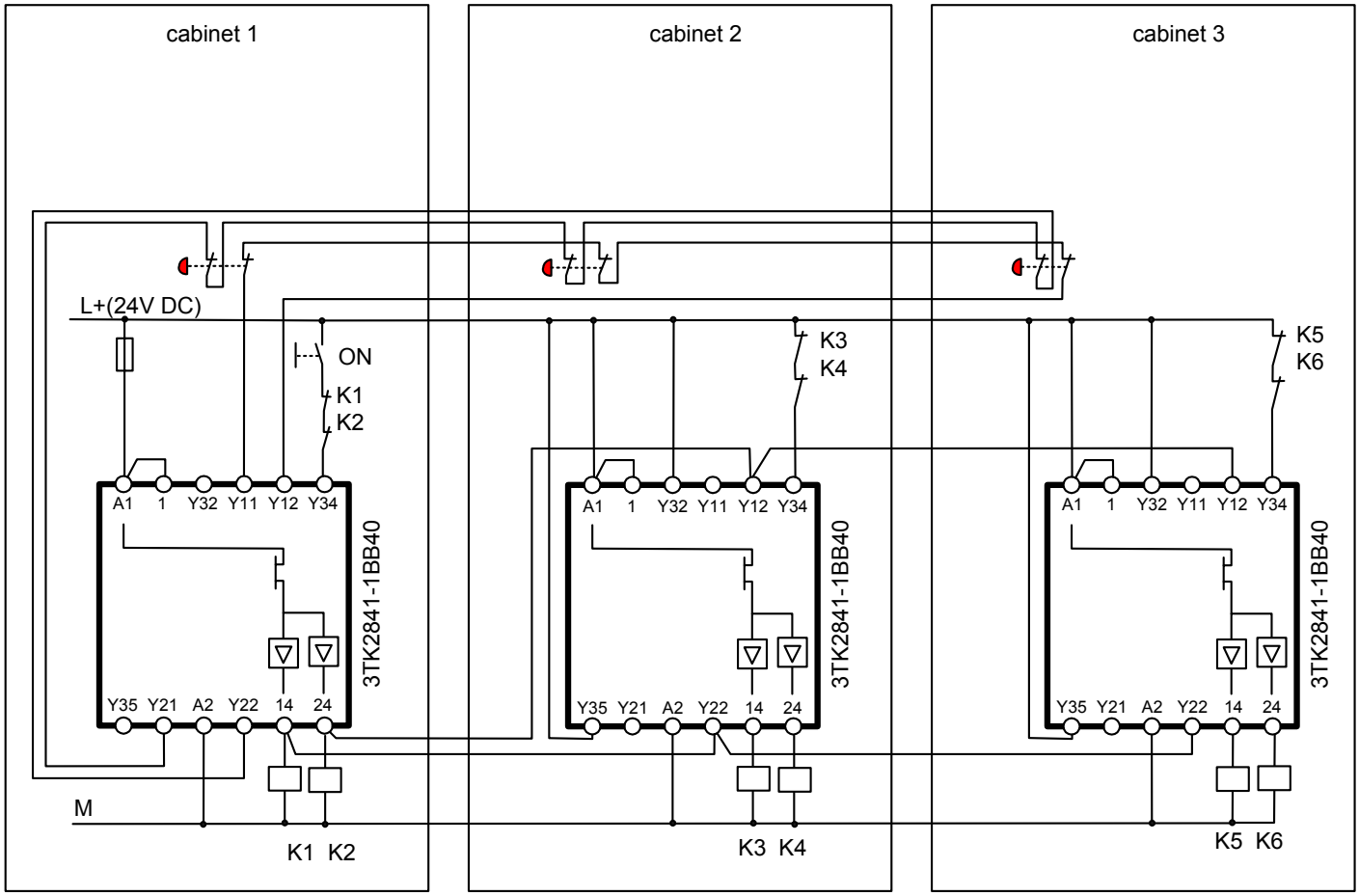


For Category 4, several EMERGENCY STOP commanding devices may be connected in series.

Sensor cables must be routed so that they are protected; only safety-relevant sensors with positively-opening contacts may be used as sensors.

| | | |
|---|---|---|
| **3TK2842** | **Category 2** (acc. EN 954-1)<br>**E-Stop Monitoring**<br>**Stop-Category 0 and 1** | **1NOel 1NOel tv**<br>**Vs 24 V DC**<br>**monitored start** |

2

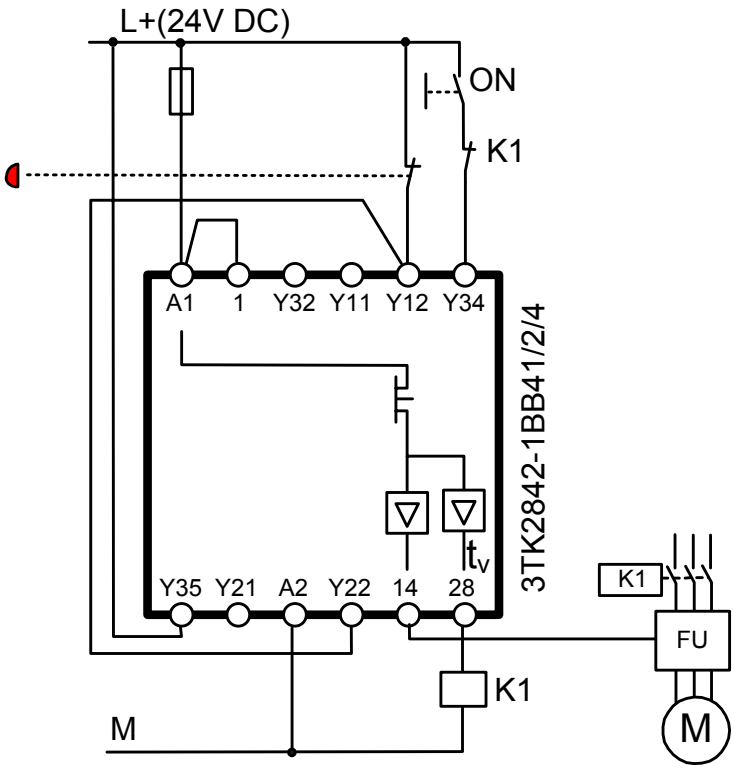


The controller enable of the frequency inverter is controlled directly – and the power contactor, with a time delay.

Sensor cables must be routed so that they are protected; only safety-relevant sensors with positively-opening contacts may be used as sensors.
Using this circuit example, Category 2 according to EN 954-1 can only be fulfilled, if, when the actuator fails, either an alarm is automatically generated or the machine control initiates a safe condition. Otherwise a second shutdown path is required.

| | | |
|---|---|---|
| **3TK2842** | **Category 4** (acc. EN 954-1)<br>**E-Stop Monitoring**<br>**Stop-Category 0 and 1** | **1NOel 1NOel tv**<br>**Vs 24 V DC**<br>**monitored start** |



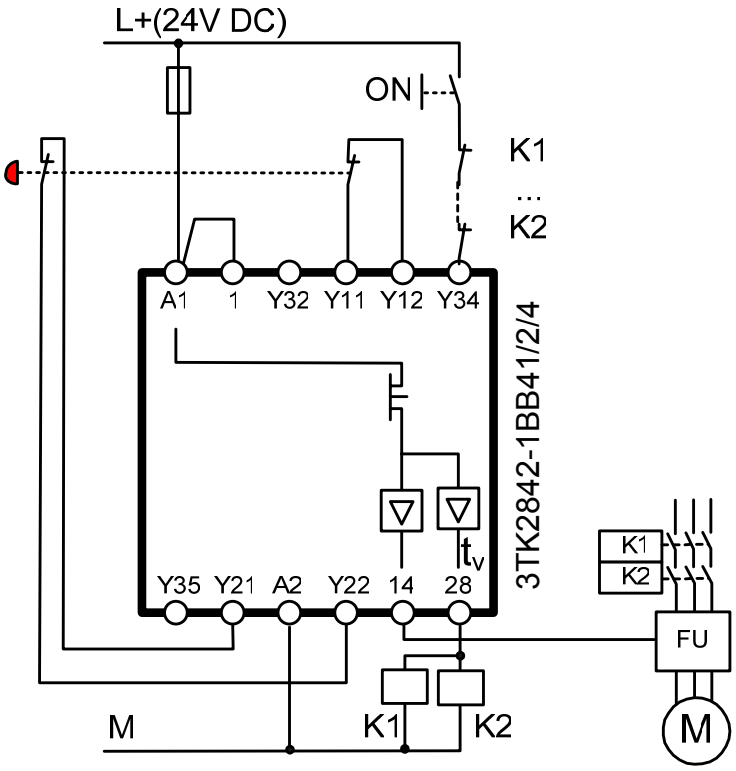


The controller enable of the frequency inverter is controlled directly – and the power contactor, with a time delay.
For Category 4, several EMERGENCY STOP commanding devices may be connected in series.

Sensor cables must be routed so that they are protected; only safety-relevant sensors with positively-opening contacts may be used as sensors.

| | | |
|---|---|---|
| **3TK2842** | **Category 2** (acc. EN 954-1)<br>**protective door**<br>**Monitoring**<br>**Stop-Category 0 and 1** | **1NO$_{el}$ 1NO$_{el\ tv}$**<br>**V$_s$ 24 V DC**<br>**auto start** |

2

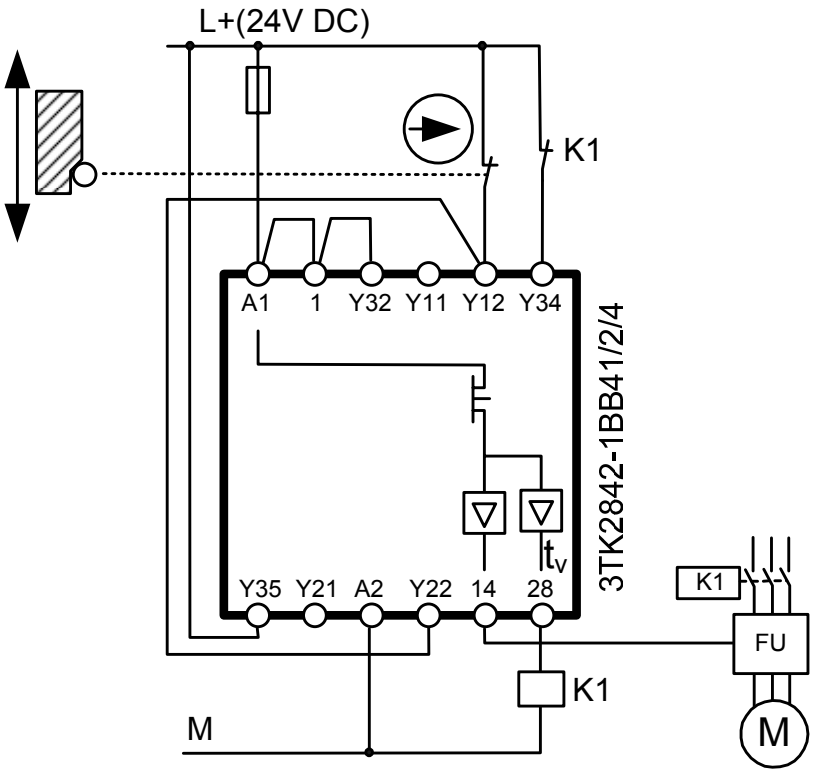


The controller enable of the frequency inverter is controlled directly – and the power contactor, with a time delay.

Sensor cables must be routed so that they are protected; only safety-relevant sensors with positively-opening contacts may be used as sensors.
Using this circuit example, Category 2 according to EN 954-1 can only be fulfilled, if, when the actuator fails, either an alarm is automatically generated or the machine control initiates a safe condition. Otherwise a second shutdown path is required.

| | | |
|---|---|---|
| **3TK2842** | **Category 4** (acc. EN 954-1)<br>**protective door**<br>**Monitoring**<br>**Stop-Category 0 and 1** | **1NO$_{el}$ 1NO$_{el\ tv}$**<br>**V$_s$ 24 V DC**<br>**auto start** |

2

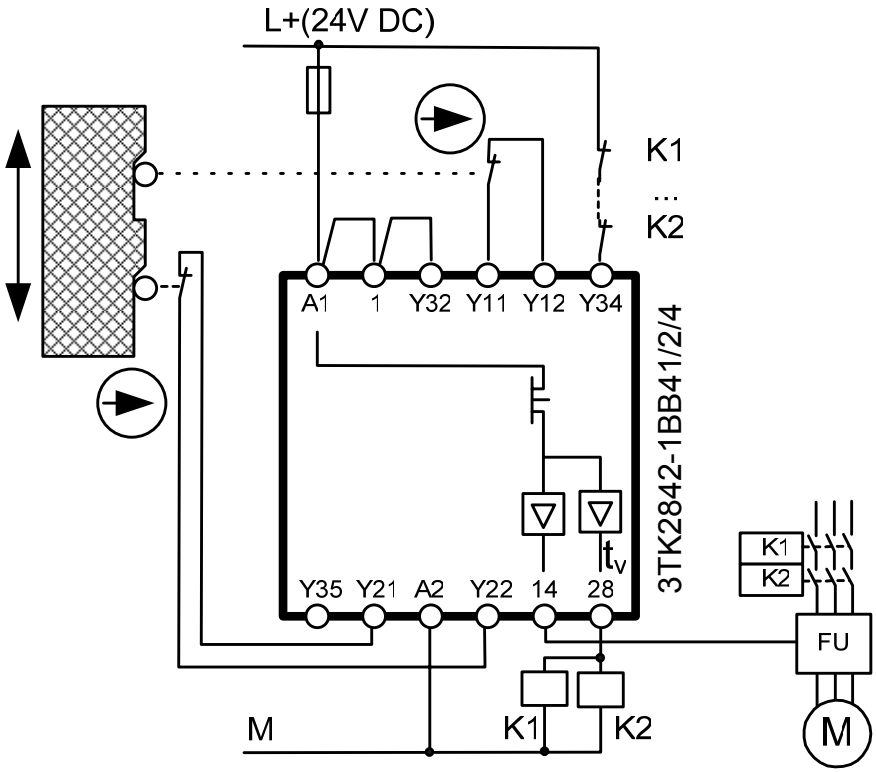


The controller enable of the frequency inverter is controlled directly – and the power contactor, with a time delay.
For Category 4, it is not permissible to connect several position switches in series to implement a protective door monitoring function (due to an inadequate level of fault detection).

Sensor cables must be routed so that they are protected; only safety-relevant sensors with positively-opening contacts may be used as sensors.

| | | |
|---|---|---|
| **3TK2842** | **Category 4** (acc. EN 954-1)<br>**Magnet sensor Monitoring**<br>**Stop-Category 0 and 1** | **1NO$_{el}$ 1NO$_{el\ tv}$**<br>**V$_s$ 24 V DC**<br>**auto start** |

2

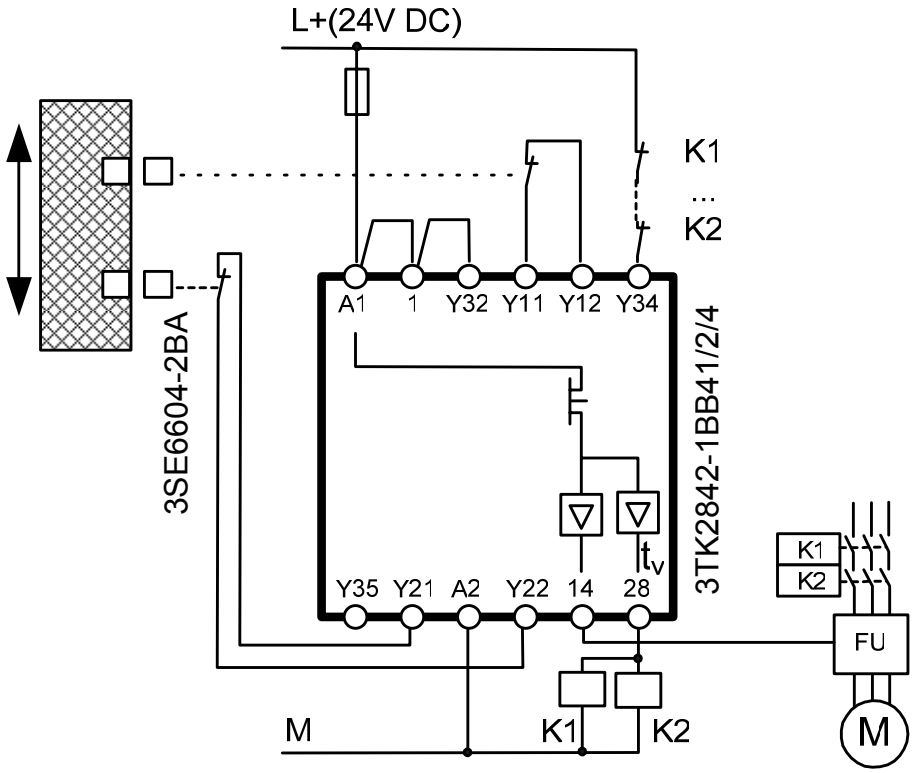


The controller enable of the frequency inverter is controlled directly – and the power contactor, with a time delay.

Sensor cables must be routed so that they are protected; only safety-relevant sensors with positively-opening contacts may be used as sensors.

| | | |
|---|---|---|
| **3TK2842** | **Category 4** (acc. EN 954-1)<br>**Light grid Monitoring**<br>**Stop-Category 0 and 1** | **1NO$_{el}$ 1NO$_{el\ tv}$**<br>**V$_s$ 24 V DC**<br>**auto start** |
| | **Light grid**<br>**Type 4 (EN 61496-1)** | |



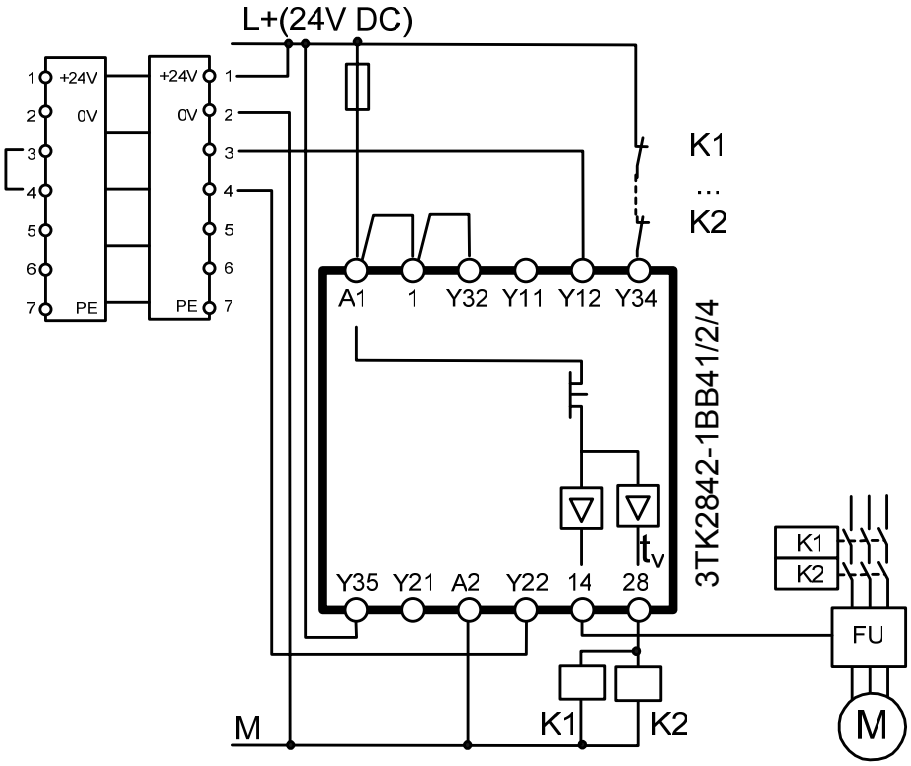


The controller enable of the frequency inverter is controlled directly – and the power contactor, with a time delay.

Sensor cables must be routed so that they are protected; only safety-relevant sensors with positively-opening contacts may be used as sensors.

| | | |
|---|---|---|
| **3TK2842** | **Category 3** (acc. EN 954-1)<br>**Safety mat Monitoring**<br>**Stop-Category 0 and 1** | **1NOel 1NOel tv**<br>**Vs 24 V DC**<br>**auto start** |

2

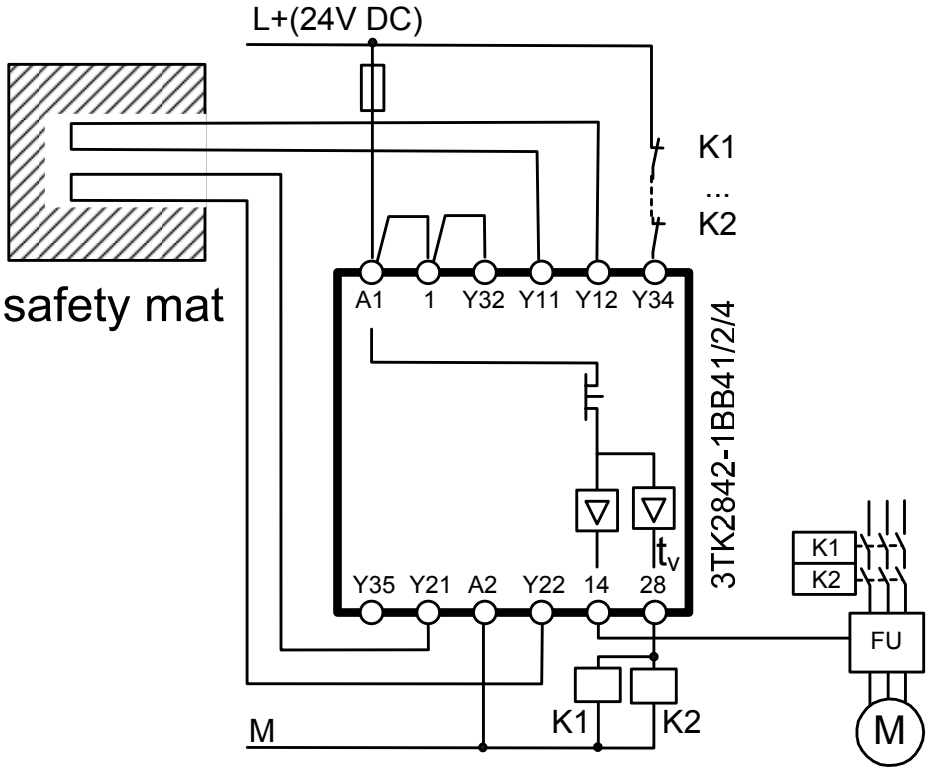


Category 3 according to EN 954-1 of this circuit is as a result of the safety mat.
The controller enable of the frequency inverter is controlled directly – and the power contactor, with a time delay.

Sensor cables must be routed so that they are protected; only safety-relevant sensors with positively-opening contacts may be used as sensors.

| Safety relay | Function | Comments |
|---|---|---|
| **3TK2842 + 3TK2830 + 3TK2830** | **Category 4** (acc. EN 954-1)<br>**protective door**<br>**Monitoring**<br>**Stop-Category 0 and 1** | **4NO 4NO$_{tv}$**<br>**V$_s$ 24 V DC**<br>**auto start** |



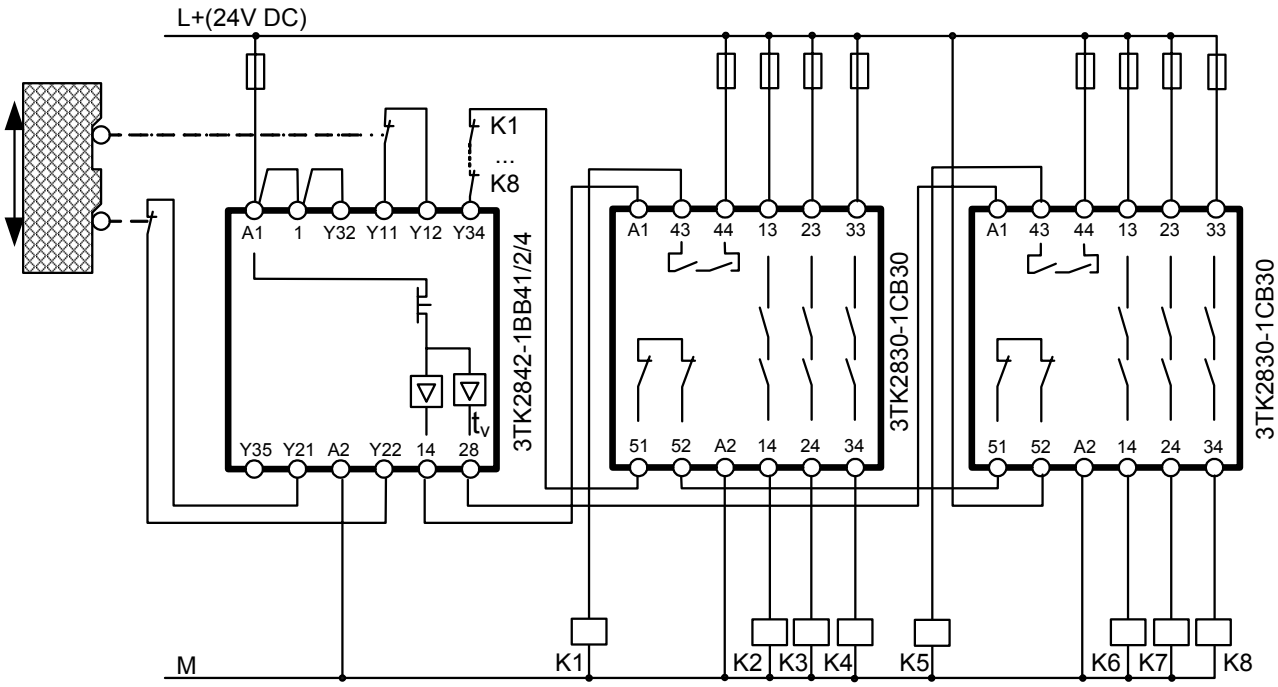


For Category 4, it is not permissible to connect several position switches in series to implement a protective door monitoring function (due to an inadequate level of fault detection).

Sensor cables must be routed so that they are protected; only safety-relevant sensors with positively-opening contacts may be used as sensors.

2

| Safety relay | Function | Comments |
|---|---|---|
| **3TK2842 + 3TK2841** | **Category 4** (acc. EN 954-1)<br>**protective door**<br>**Monitoring**<br>**Stop-Category 0 and 1**<br><br>With interlocking, type-controlled | **2NO$_{el}$ 1NO$_{el\ tv}$**<br>**V$_s$ 24 V DC**<br>**monitored start** |

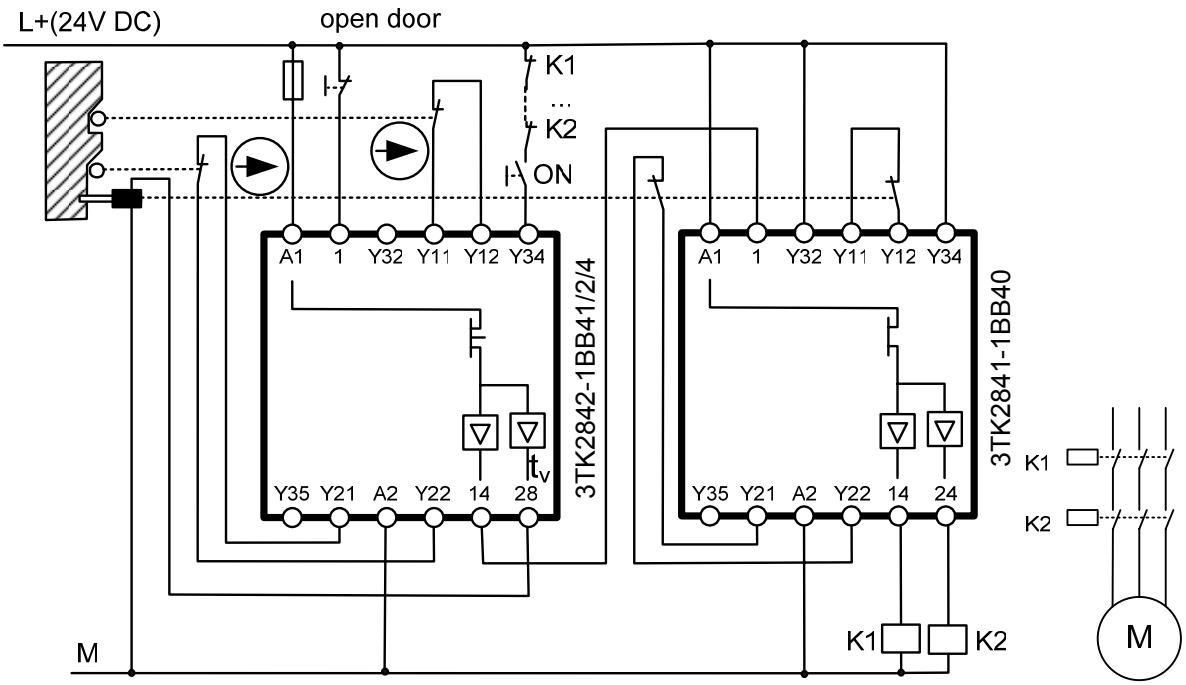


The tumbler mechanism of the position switch - interlocked with solenoid - is controlled with a time delay. For Category 4, it is not permissible to connect several position switches in series to implement a protective door monitoring function (due to an inadequate level of fault detection).

Sensor cables must be routed so that they are protected; only safety-relevant sensors with positively-opening contacts may be used as sensors.

# 3TK2845

# Safety relays with relays and electronic outputs

| | | |
|---|---|---|
| **3TK2845** | **Category 2** (acc. EN 954-1)<br>**E-Stop and protective door**<br>**Monitoring**<br>**Stop-Category 0** | **2NO 2NO$_{el}$ 1M$_{el}$**<br>**V$_s$ 24 V DC**<br>**manual start** |

Key-operated switch, that jumpers the protective door for the service mode

3

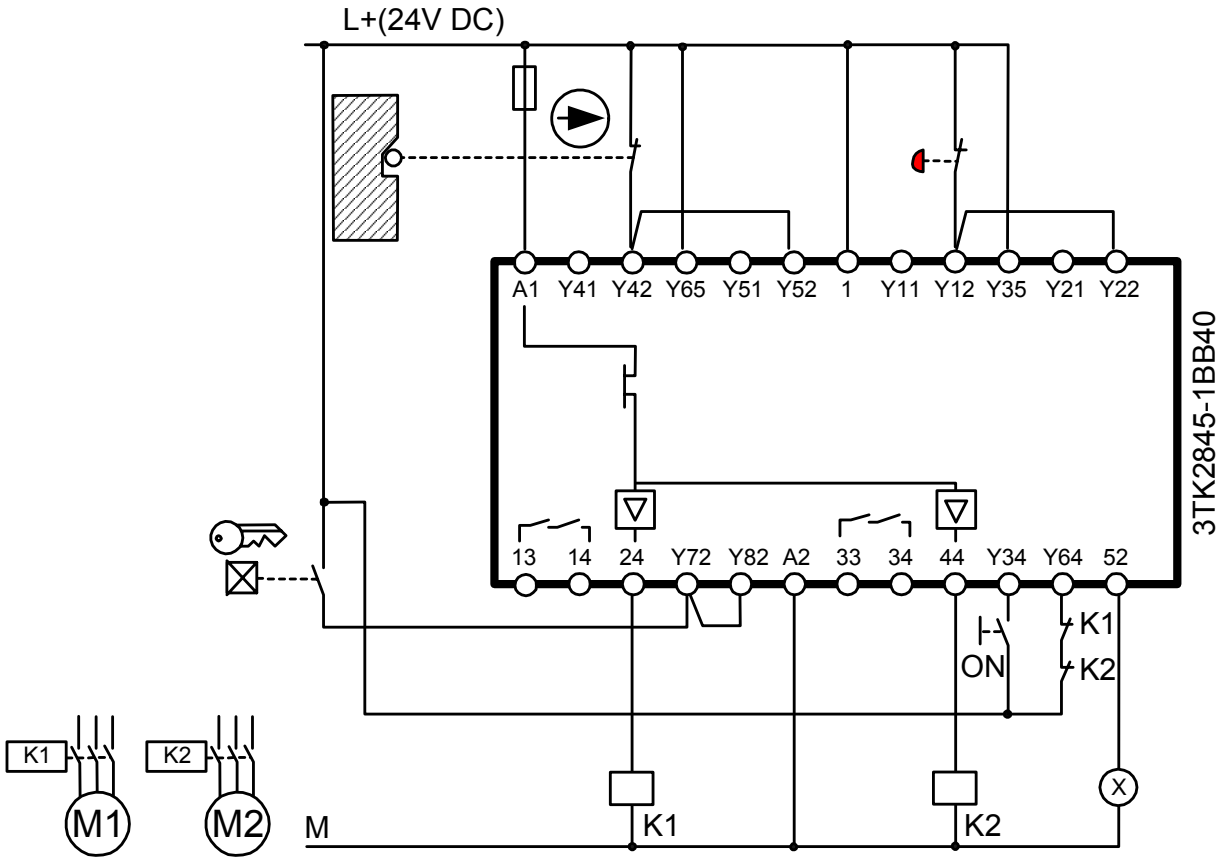


Sensor cables must be routed so that they are protected; only safety-relevant sensors with positively-opening contacts may be used as sensors.
Using this circuit example, Category 2 according to EN 954-1 can only be fulfilled, if, when the actuator fails, either an alarm is automatically generated or the machine control initiates a safe condition. Otherwise a second shutdown path is required.

| | | |
|---|---|---|
| **3TK2845** | **Category 4** (acc. EN 954-1)<br>**E-STOP and Protective door Monitoring**<br>**Stop-Category 0**<br><br>Key-operated switch, that jumpers the protective door for the service mode | **2NO 2NOel 1Sel**<br>**Vs 24 V DC**<br>**monitored start** |

3

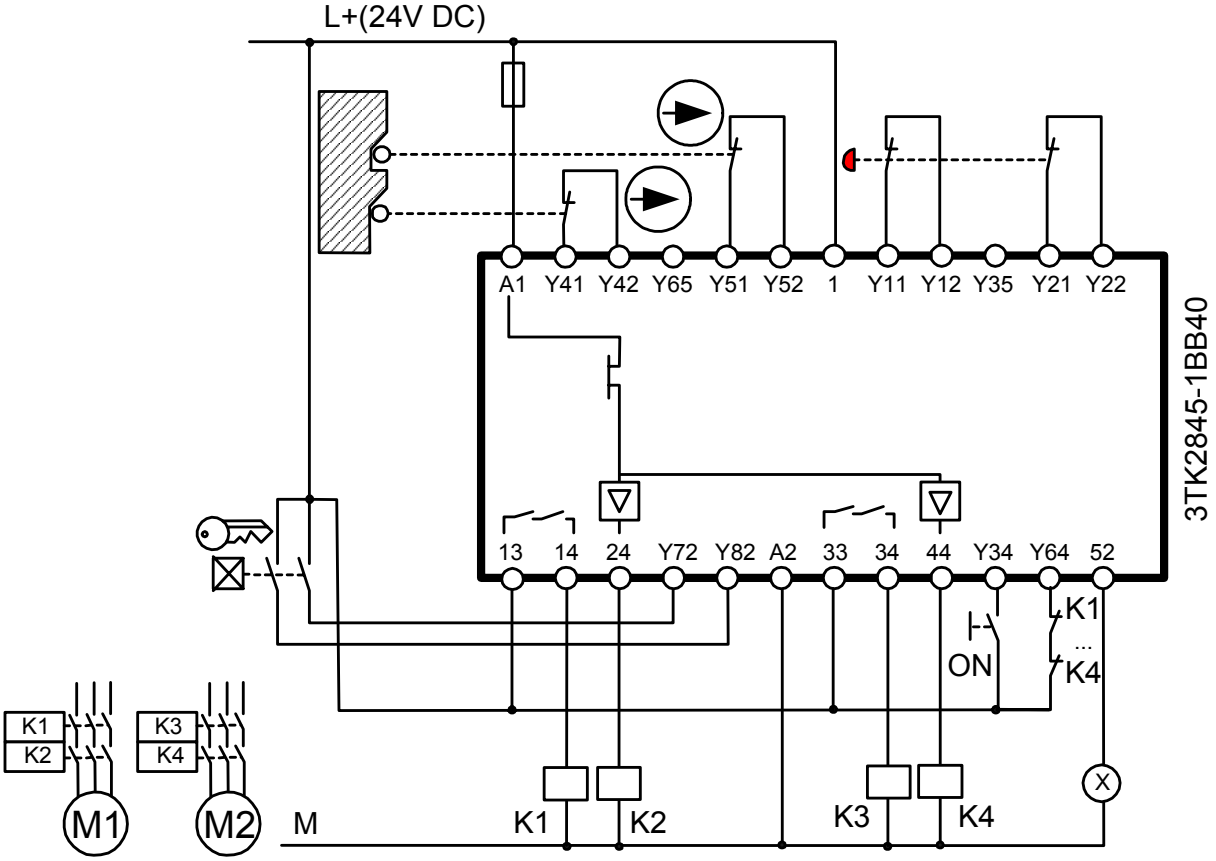


For Category 4, several EMERGENCY STOP commanding devices may be connected in series. For Category 4, it is not permissible to connect several position switches in series to implement a protective door monitoring function (due to an inadequate level of fault detection).

Sensor cables must be routed so that they are protected; only safety-relevant sensors with positively-opening contacts may be used as sensors.

## 3TK2845

**Category 2** (acc. EN 954-1)
**E-Stop and protective door Monitoring**
**Stop-Category 0 and 1**

**1NO 1NO$_{el}$ / 1NO$_{tv}$ 1NO$_{el\ tv}$ /1S$_{el}$**
**V$_s$ 24 V DC**
**manual start**

Key-operated switch, that jumpers the protective door for the service mode

3

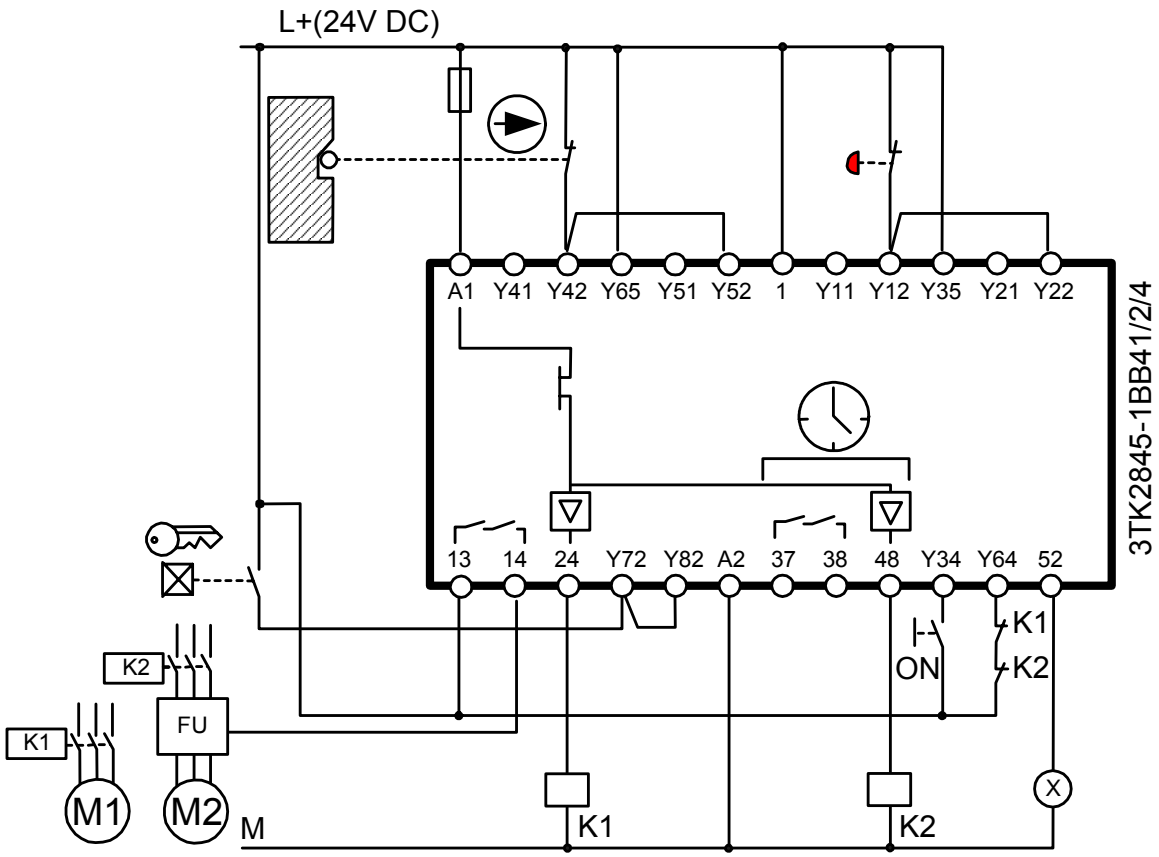


Sensor cables must be routed so that they are protected; only safety-relevant sensors with positively-opening contacts may be used as sensors.

| | | |
|---|---|---|
| **3TK2845** | **Category 4** (acc. EN 954-1)<br>**E-Stop and protective door Monitoring**<br>**Stop-Category 0 and 1** | **1NO 1NO$_{el}$ / 1NO$_{tv}$ 1NO$_{el\ tv}$ /1S$_{el}$**<br>**V$_s$ 24 V DC**<br>**monitored start** |

Key-operated switch, that jumpers the protective door for the service mode

3

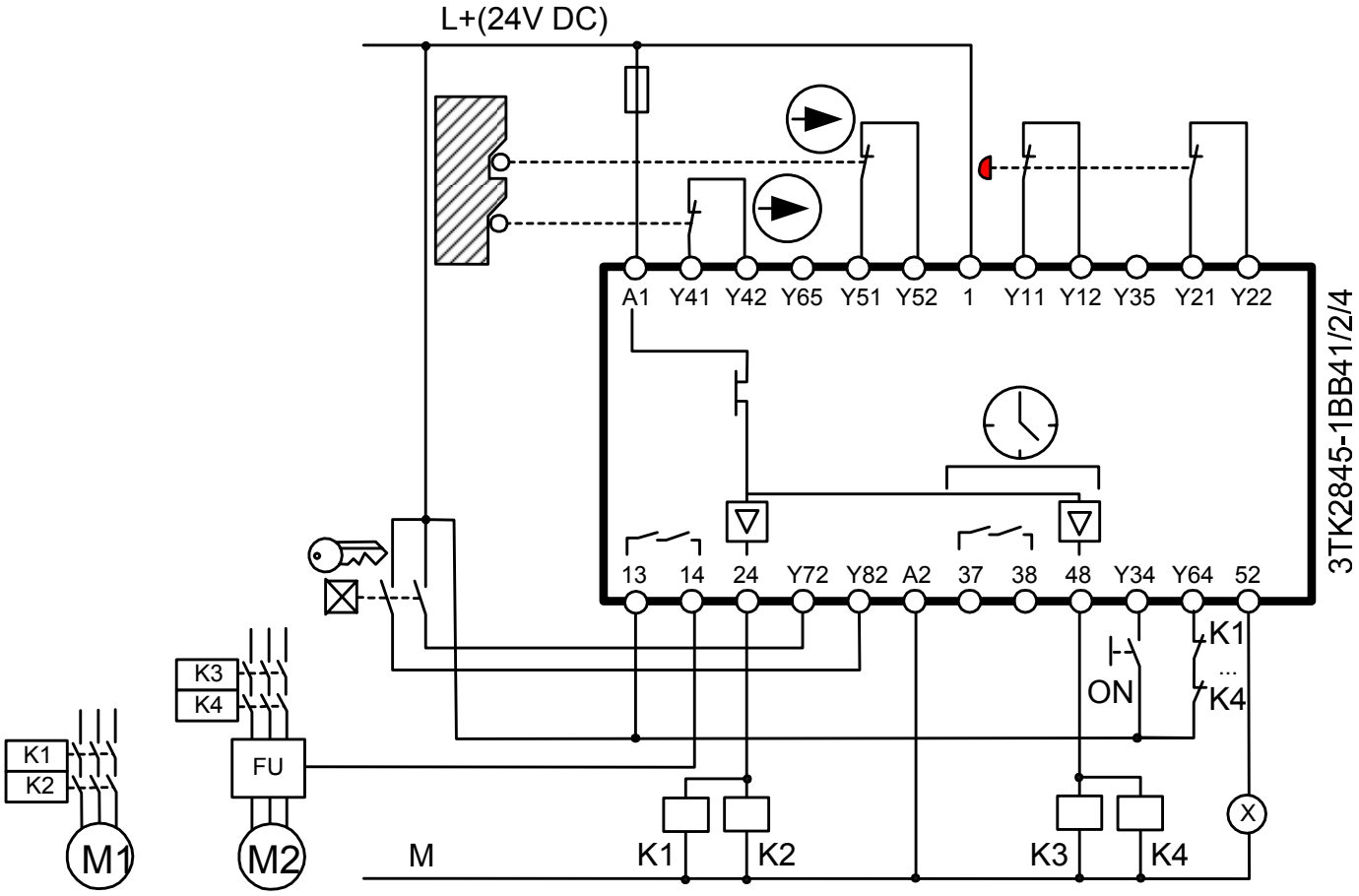


For Category 4, several EMERGENCY STOP commanding devices may be connected in series. For Category 4, it is not permissible to connect several position switches in series to implement a protective door monitoring function (due to an inadequate level of fault detection).

Sensor cables must be routed so that they are protected; only safety-relevant sensors with positively-opening contacts may be used as sensors.

## 3TK2845 + 3TK2841

**Category 4** (acc. EN 954-1)
**E-Stop and Light grid Monitoring**
**Stop-Category 0**

Key-operated switch, that bypasses the light grid type 4 (EN 61496-1) for service operation

**2NO 2NOel 1Sel**
**Vs 24 V DC**
**monitored start**

3

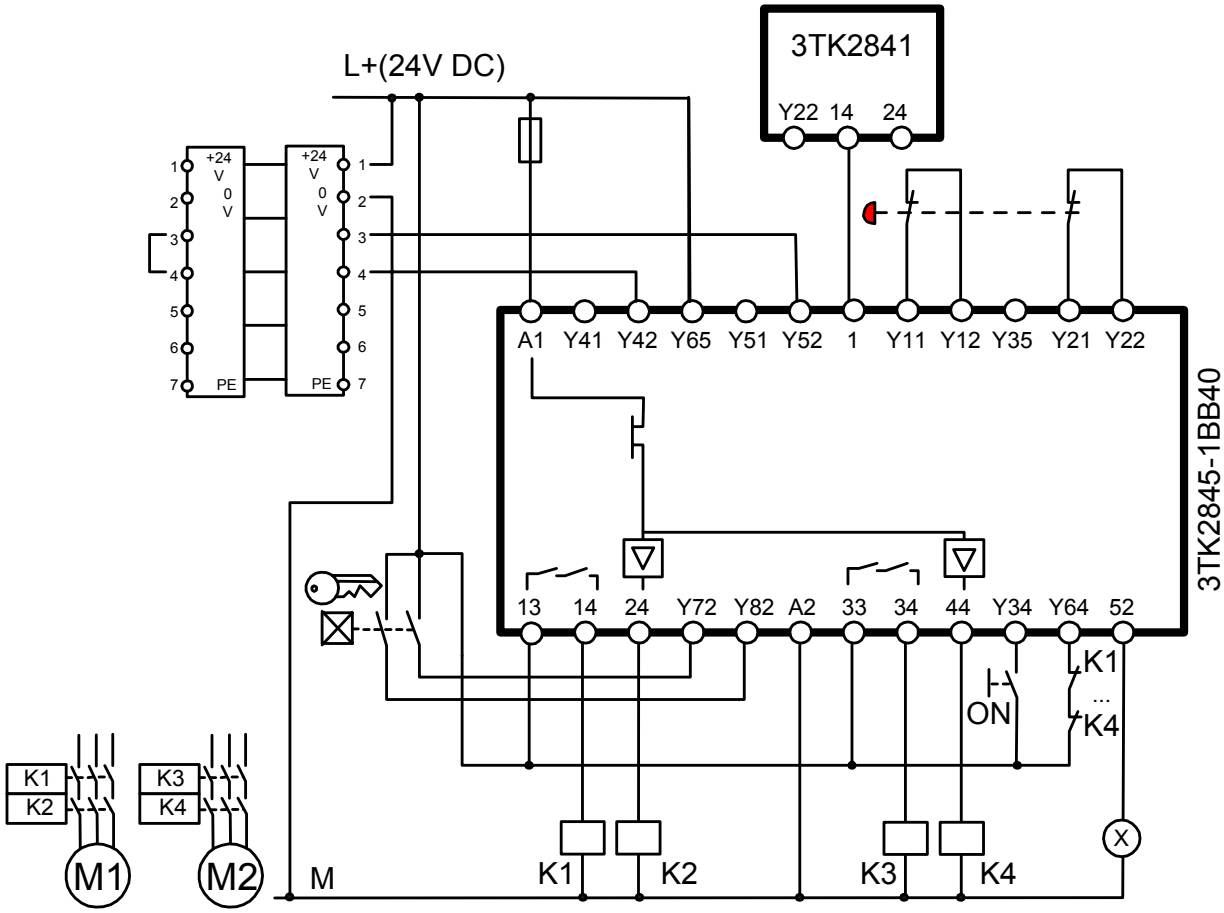


For Category 4, several EMERGENCY STOP commanding devices may be connected in series.

Sensor cables must be routed so that they are protected; only safety-relevant sensors with positively-opening contacts may be used as sensors.

| Safety relay | Function | Comments |
|---|---|---|
| **3TK2845 + 3TK2841** | **Category 4** (acc. EN 954-1)<br>**E-Stop and Light grid Monitoring**<br>**Stop-Category 0 and 1**<br><br>Key-operated switch, that bypasses the light grid type 4 (EN 61496-1) for service operation | **1NO 1NO$_{el}$ / 1NO$_{tv}$ 1NO$_{el\ tv}$ /1S$_{el}$**<br>**V$_s$ 24 V DC**<br>**monitored start** |

3

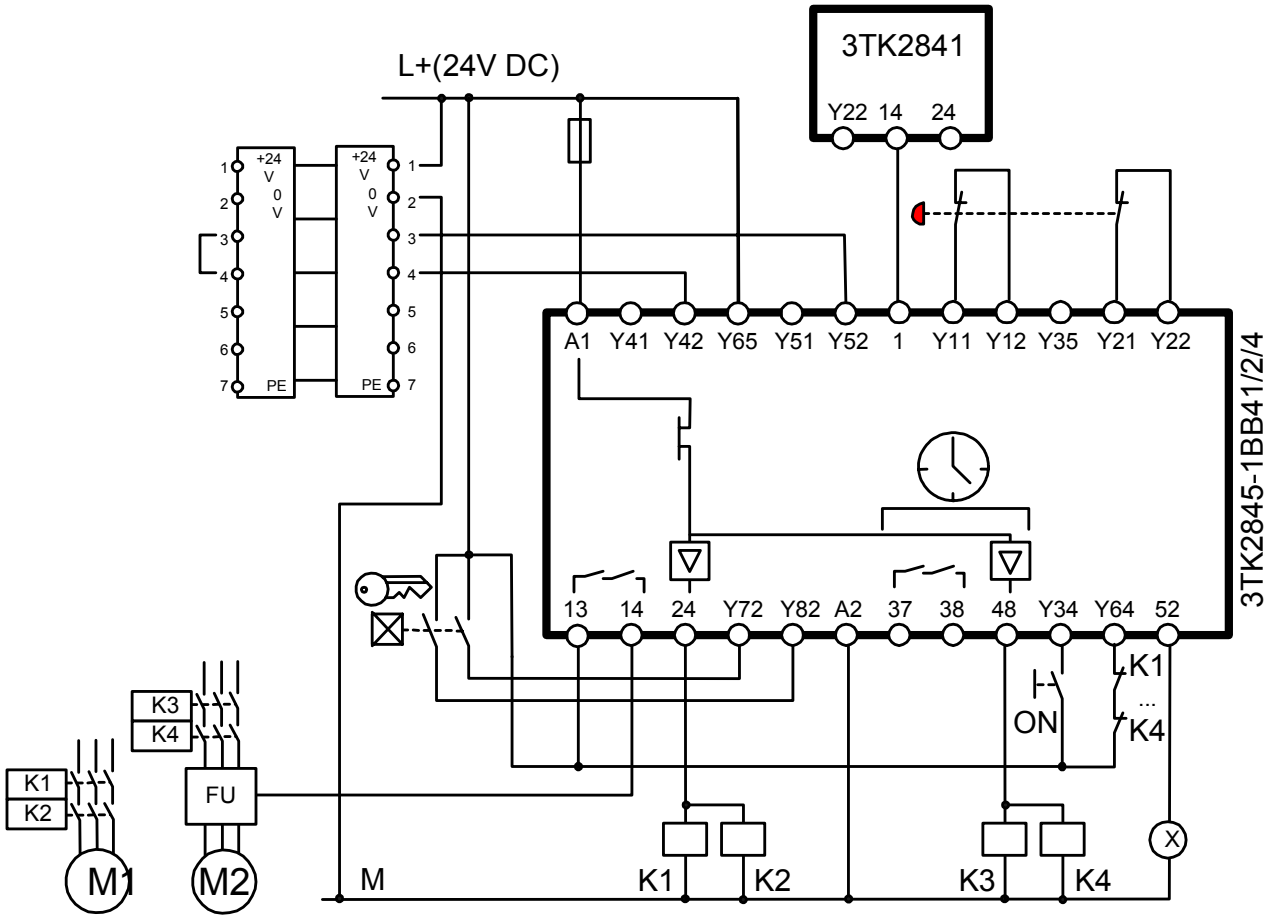


For Category 4, several EMERGENCY STOP commanding devices may be connected in series.

Sensor cables must be routed so that they are protected; only safety-relevant sensors with positively-opening contacts may be used as sensors.

| Safety relay | Function | Comments |
|---|---|---|
| **3TK2845 + 3TK2841** | **Category 2** (acc. EN 954-1)<br>**E-Stop and protective door Monitoring**<br>**Stop-Category 0 and 1**<br><br>Key-operated switch, that jumpers the protective door for the service mode | **1NO 2NO$_{el}$ / 1NO$_{tv}$ 1NO$_{el\ tv}$ /1S$_{el}$**<br>**V$_s$ 24 V DC**<br>**manual start** |

3

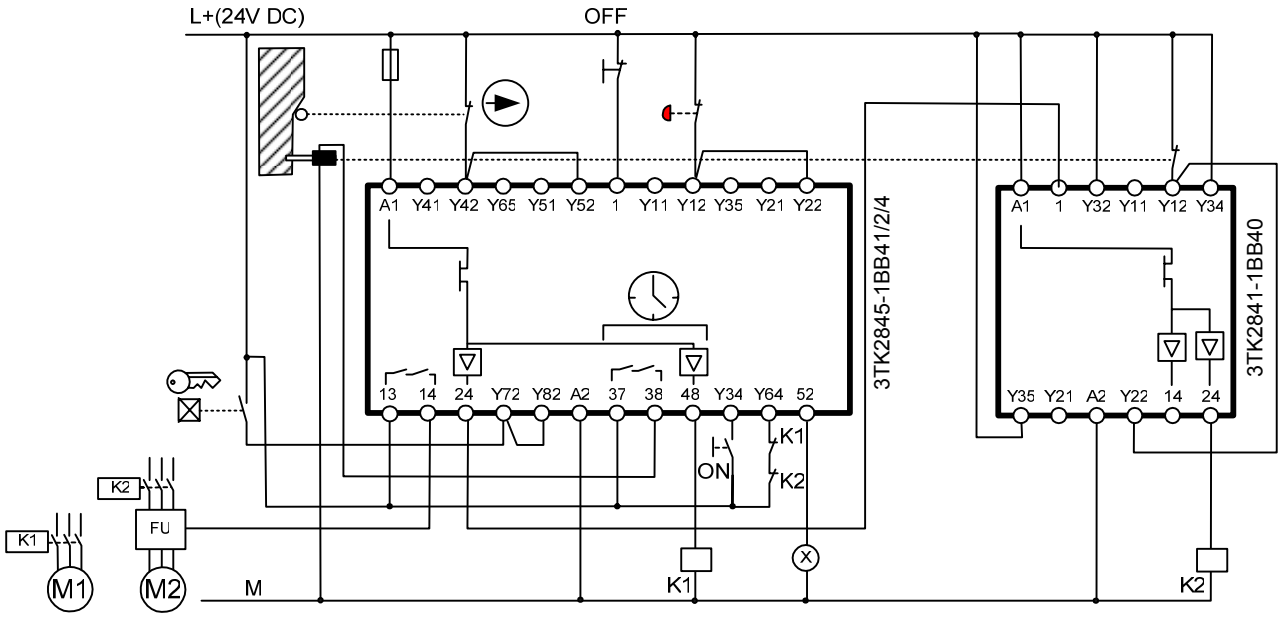


The tumbler mechanism of the position switch - interlocked with solenoid - is controlled with a time delay.

Sensor cables must be routed so that they are protected; only safety-relevant sensors with positively-opening contacts may be used as sensors.

| Safety relay | Function | Comments |
|---|---|---|
| **3TK2845 + 3TK2841** | **Category 4 (acc. EN 954-1)**<br>**E-Stop and protective door Monitoring**<br>**Stop-Category 0 and 1**<br><br>Key-operated switch, that jumpers the protective door for the service mode | **1NO 2NO$_{el}$ / 1NO$_{tv}$ 1NO$_{el\ tv}$ /1S$_{el}$**<br>**V$_s$ 24 V DC**<br>**monitored start** |

3

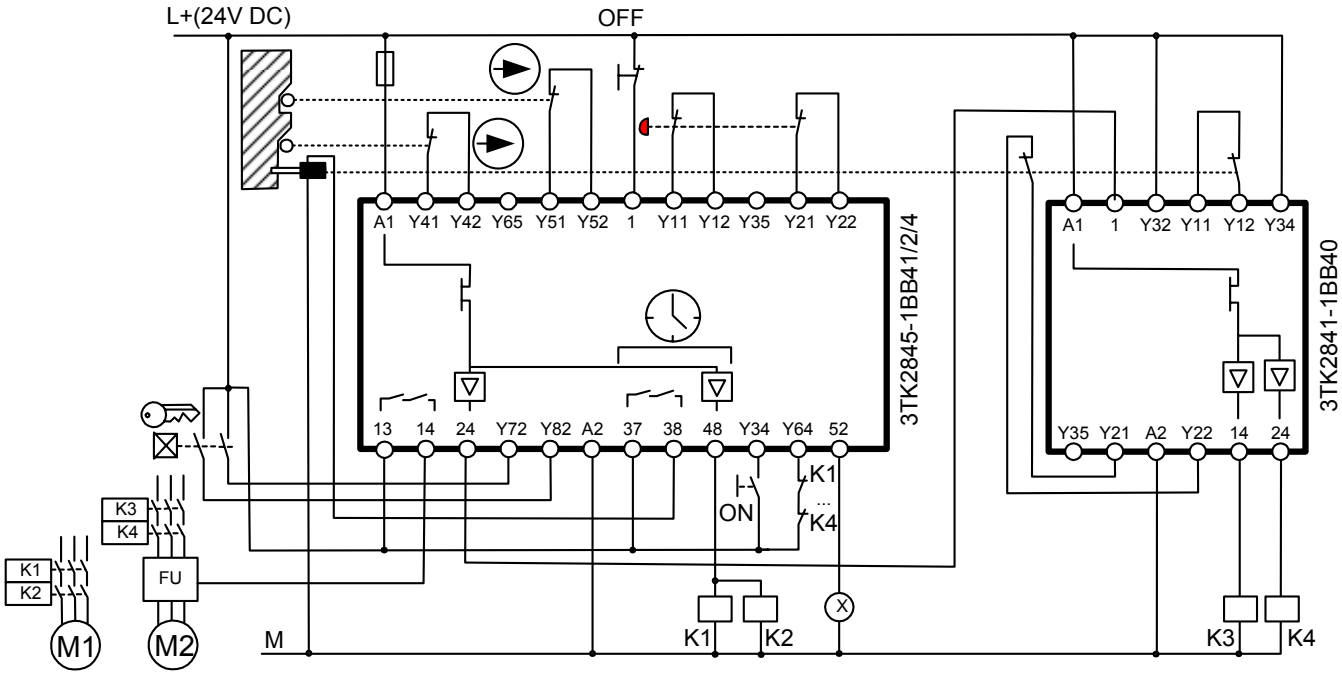


The tumbler mechanism of the position switch - interlocked with solenoid - is controlled with a time delay. Two load contactors in a cabinet for Category 4 acc. to EN 954-1 may be connected to an enable circuit (a short-circuit fault can be excluded).
For Category 4, several EMERGENCY STOP commanding devices may be connected in series.
For Category 4, it is not permissible to connect several position switches in series to implement a protective door monitoring function (due to an inadequate level of fault detection).

Sensor cables must be routed so that they are protected; only safety-relevant sensors with positively-opening contacts may be used as sensors.

# 3TK285.

# Safety relays with auxiliary relays

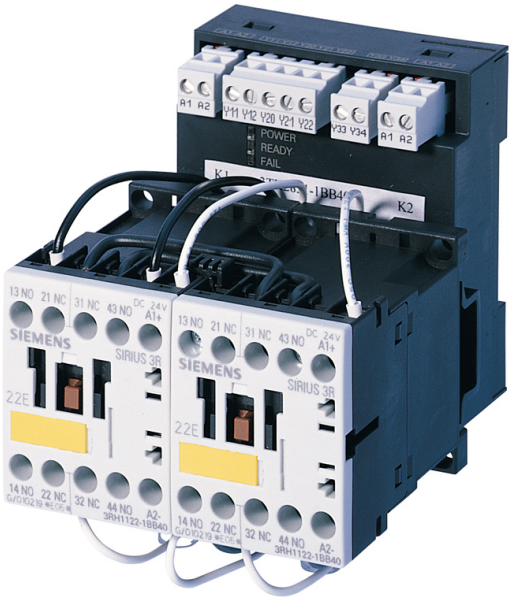

| | | |
|---|---|---|
| **3TK2850** | **Category 2** (acc. EN 954-1)<br>**E-Stop Monitoring**<br>**Stop-Category 0** | **3NO**<br>**$V_s$ 24 V DC**<br>**monitored start** |
| | | **Signaling using SIRIUS accessories** |

4

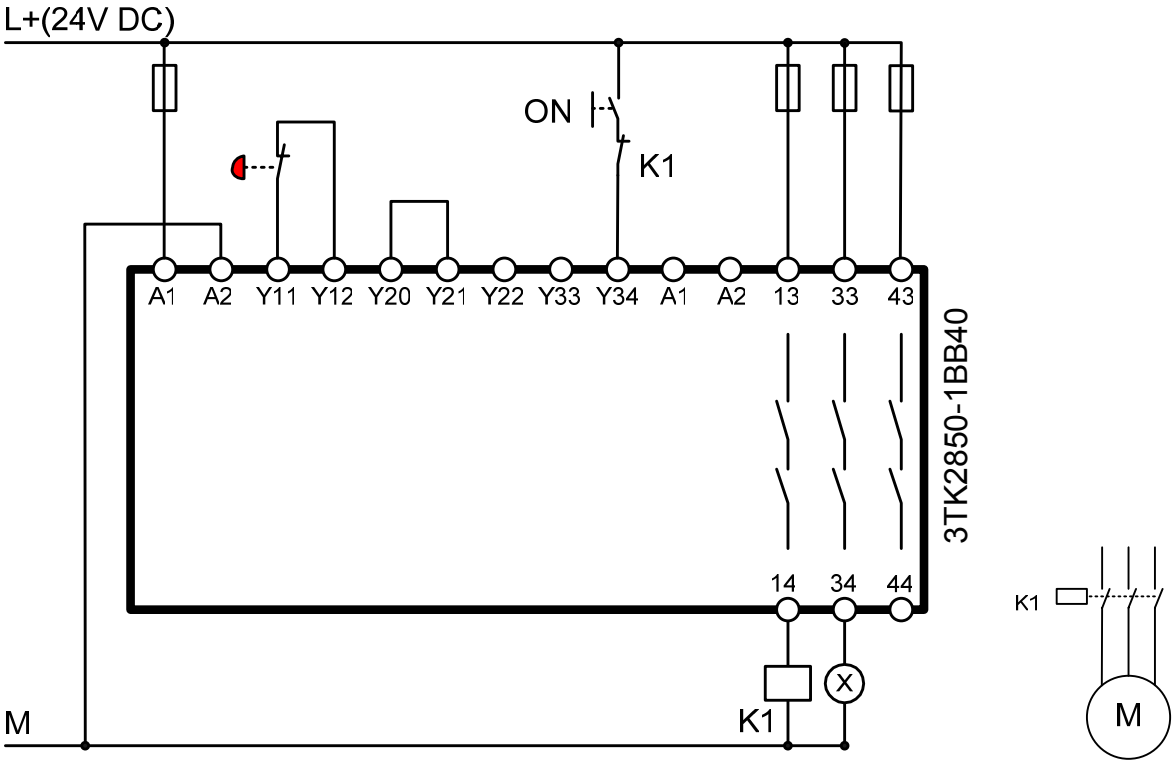


Sensor cables must be routed so that they are protected; only safety-relevant sensors with positively-opening contacts may be used as sensors.

| Safety relay | Function | Comments |
|---|---|---|
| **3TK2850-1LA20** | **Category 2** (acc. EN 954-1)<br>**E-Stop Monitoring**<br>**Stop-Category 0** | **3NO**<br>**$V_s$ 230 V AC**<br>**monitored start** |

**Signaling**
**using SIRIUS accessories**



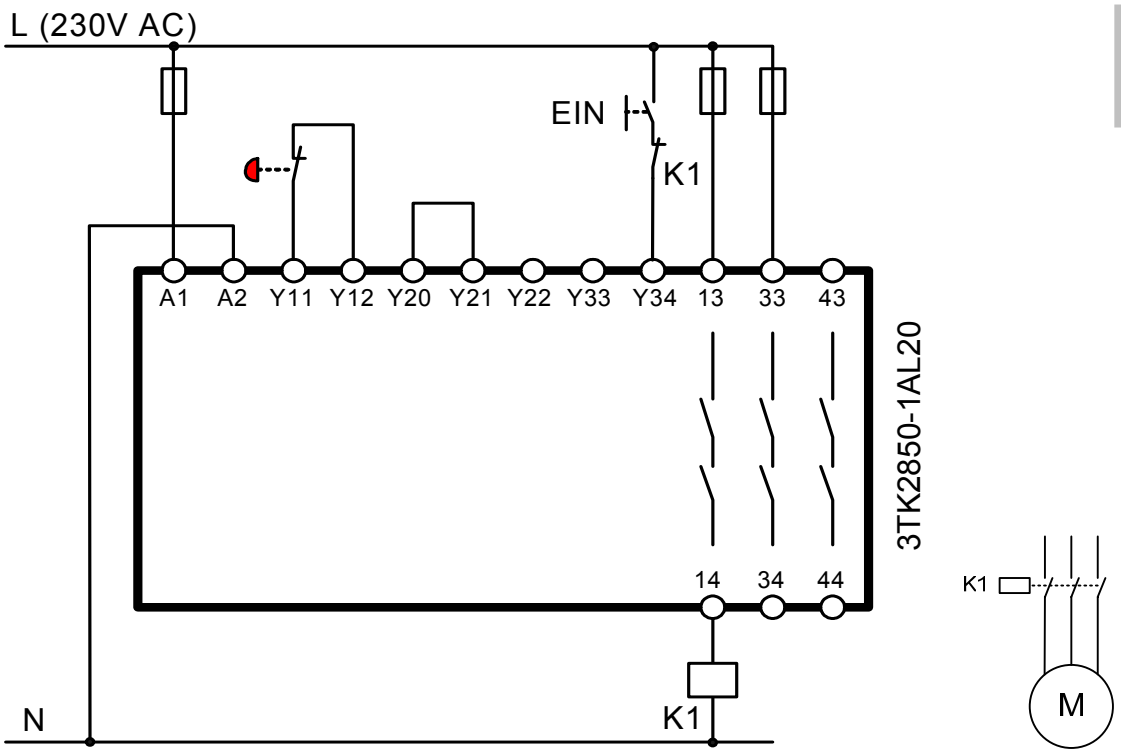


Sensor cables must be routed so that they are protected; only safety-relevant sensors with positively-opening contacts may be used as sensors.

| | | |
|---|---|---|
| **3TK2850** | **Category 2** (acc. EN 954-1)<br>**protective door**<br>**Monitoring**<br>**Stop-Category 0** | **3NO**<br>**$V_s$ 24 V DC**<br>**auto start** |
| | | **Signaling**<br>**using SIRIUS accessories** |

4

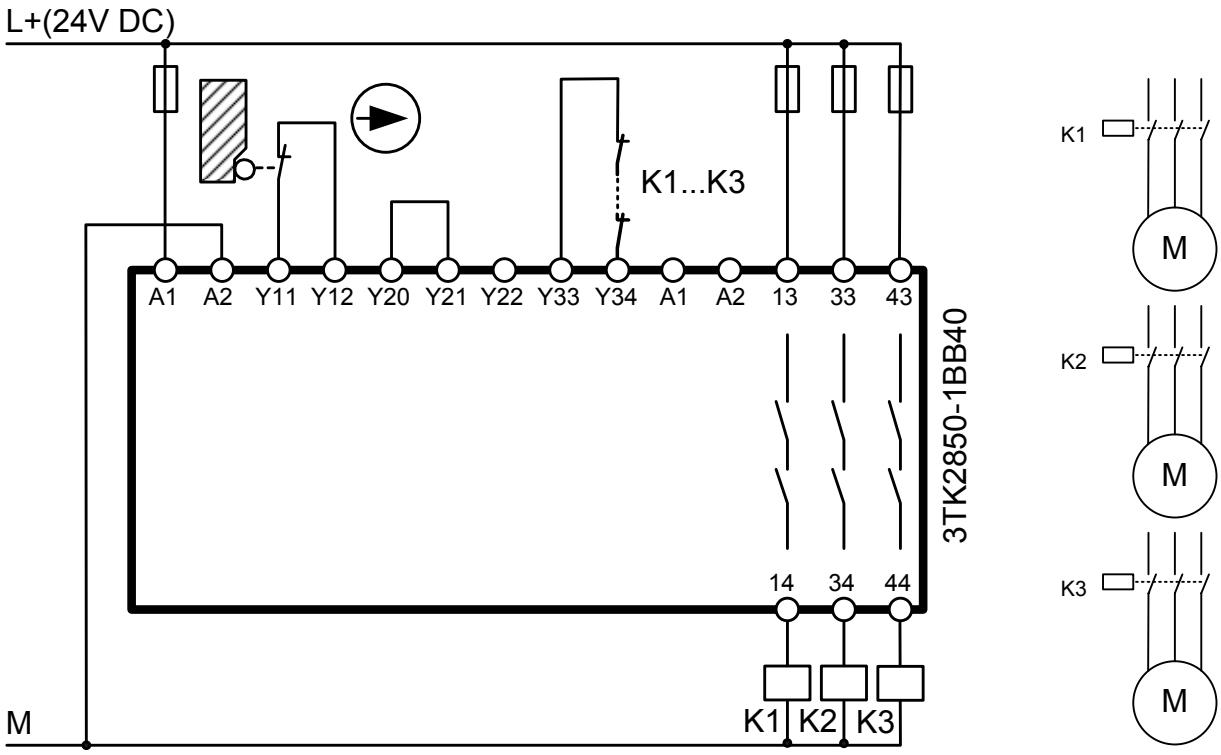


Sensor cables must be routed so that they are protected; only safety-relevant sensors with positively-opening contacts may be used as sensors.

| | | |
|---|---|---|
| **3TK2850** | **Category 3** (acc. EN 954-1)<br>**E-Stop Monitoring**<br>**Stop-Category 0** | **3NO**<br>**$V_s$ 24 V DC**<br>**monitored start** |
| | | **Signaling**<br>**using SIRIUS accessories** |



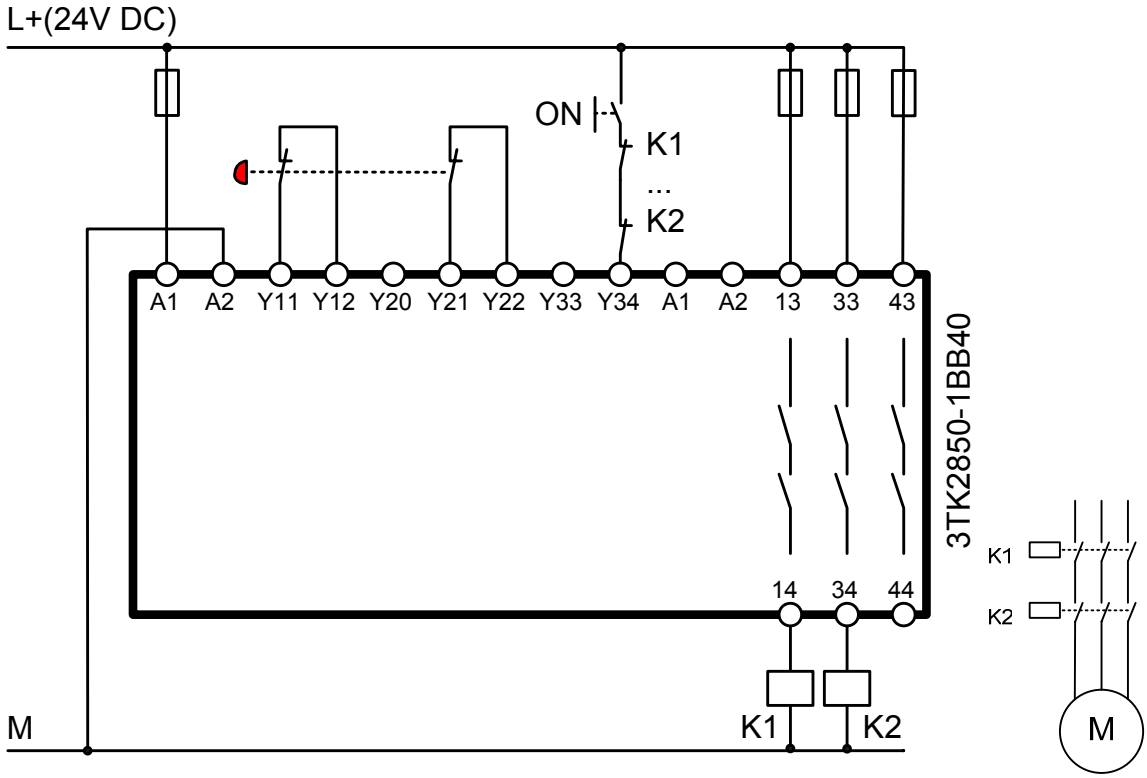


Sensor cables must be routed so that they are protected; only safety-relevant sensors with positively-opening contacts may be used as sensors.

| Safety relay | Function | Comments |
|---|---|---|
| **3TK2850 + 3TK2830** | **Category 3** (acc. EN 954-1)<br>**E-Stop Monitoring**<br>**Stop-Category 0** | **6NO**<br>**$V_s$ 24 V DC**<br>**monitored start** |
| | | **Signaling using SIRIUS accessories** |

4

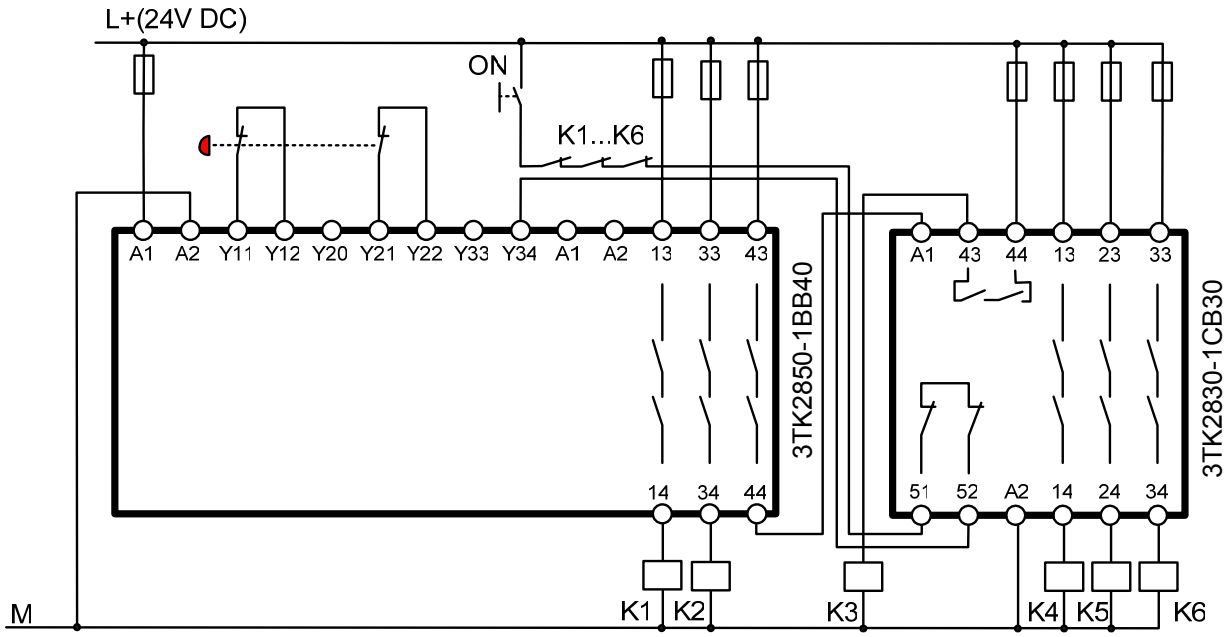


Sensor cables must be routed so that they are protected; only safety-relevant sensors with positively-opening contacts may be used as sensors.

| Safety relay | Function | Comments |
|---|---|---|
| **3TK2850 + 3TK2830 + 3TK2830** | **Category 3** (acc. EN 954-1)<br>**E-Stop Monitoring**<br>**Stop-Category 0** | **10S**<br>**$V_s$ 24 V DC**<br>**monitored start**<br><br>**Signaling using SIRIUS accessories** |

4

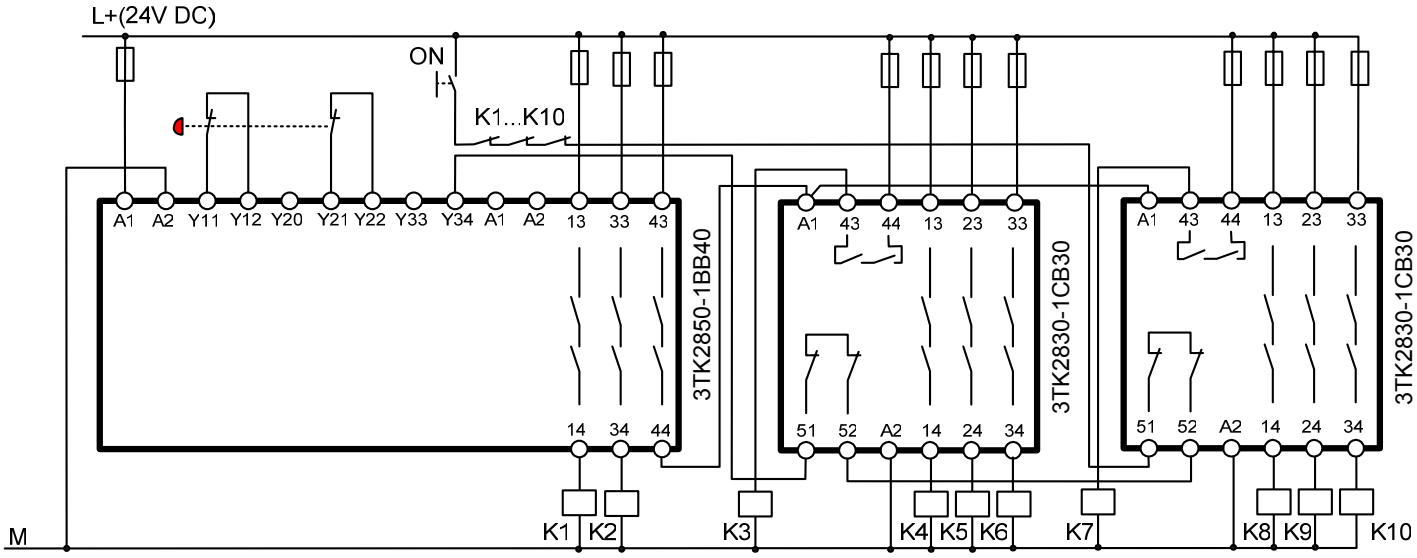


Sensor cables must be routed so that they are protected; only safety-relevant sensors with positively-opening contacts may be used as sensors.

| Safety relay | Function | Comments |
|---|---|---|
| **3TK2850 + 3TK2856** | **Category 3** (acc. EN 954-1)<br>**E-Stop Monitoring**<br>**Stop-Category 0** | **8S 1NC**<br>**$V_s$ 24 V DC**<br>**monitored start** |

**Signaling using SIRIUS accessories**

4

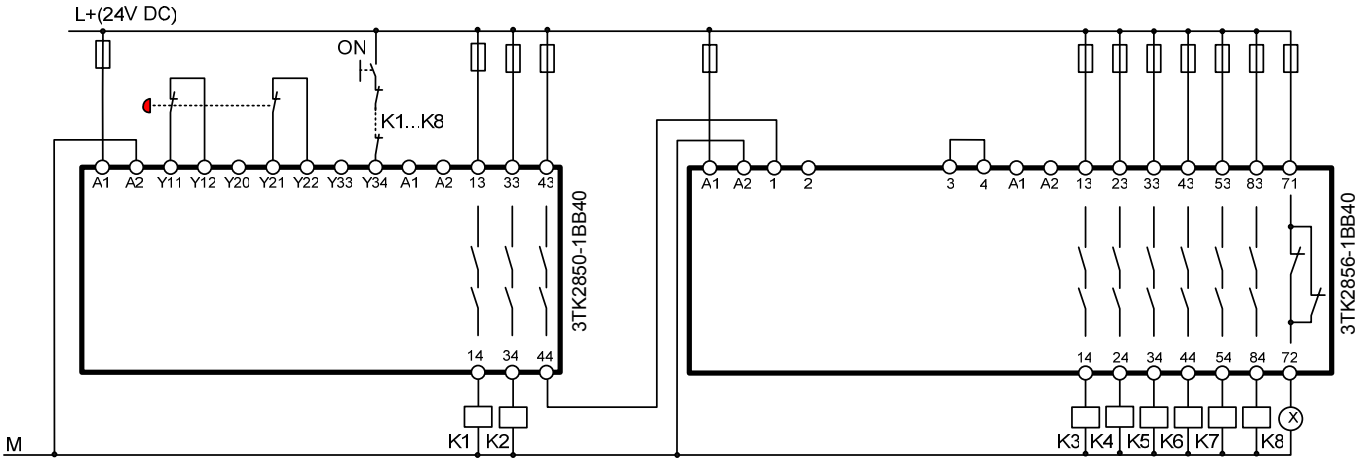


Sensor cables must be routed so that they are protected; only safety-relevant sensors with positively-opening contacts may be used as sensors.

| Safety relay | Function | Comments |
|---|---|---|
| **3TK2850** | **Category 3** (acc. EN 954-1)<br>**protective door**<br>**Monitoring**<br>**Stop-Category 0** | **3NO**<br>**$V_s$ 24 V DC**<br>**auto start**<br><br>**Signaling**<br>**using SIRIUS accessories** |

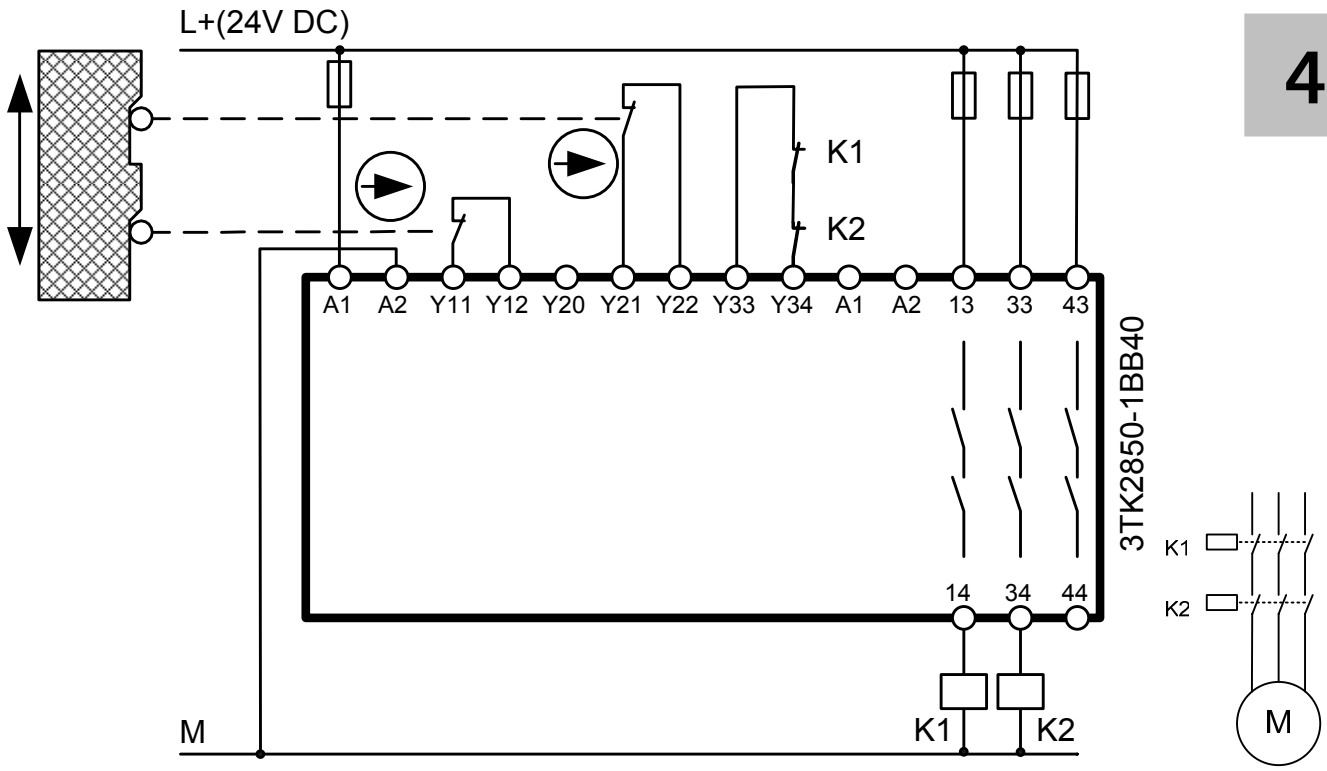




Sensor cables must be routed so that they are protected; only safety-relevant sensors with positively-opening contacts may be used as sensors.

## 3TK2850-1LA20

**Category 3** (acc. EN 954-1)
**Magnet sensor Monitoring**
**Stop-Category 0**

**3NO**
**$V_s$ 230 V AC**
**auto start**

**Signaling**
**using SIRIUS accessories**

4

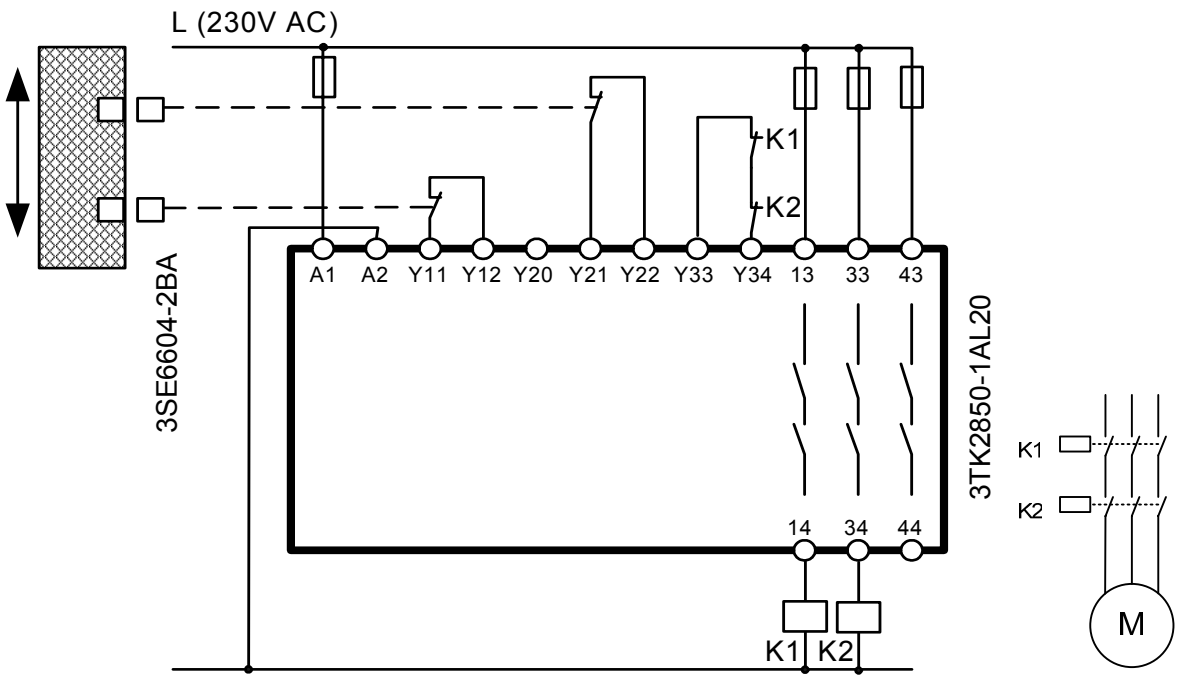


Sensor cables must be routed so that they are protected; only safety-relevant sensors with positively-opening contacts may be used as sensors.

| | | |
|---|---|---|
| **3TK2851** | **Category 2** (acc. EN 954-1)<br>**E-Stop Monitoring**<br>**Stop-Category 0** | **2NO 1NC**<br>**$V_s$ 24 V DC**<br>**monitored start** |
| | | **Signaling using SIRIUS accessories** |



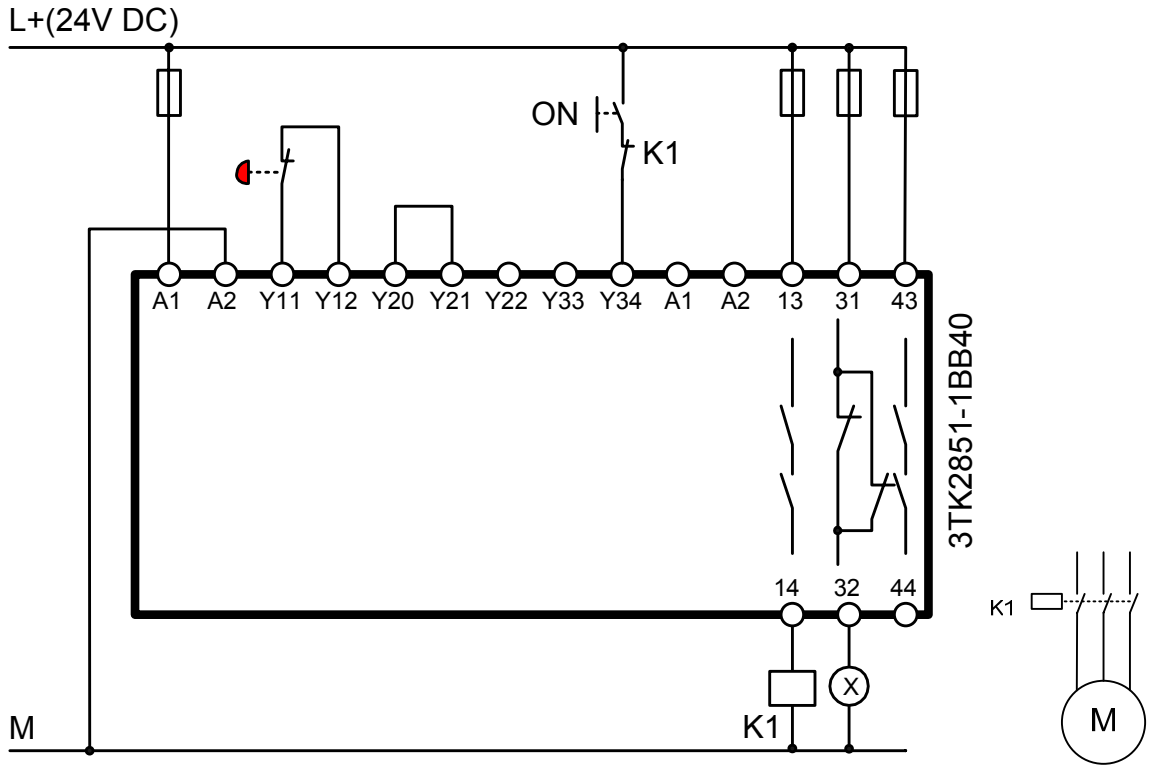


Sensor cables must be routed so that they are protected; only safety-relevant sensors with positively-opening contacts may be used as sensors.

| | | |
|---|---|---|
| **3TK2851** | **Category 2** (acc. EN 954-1)<br>**protective door**<br>**Monitoring**<br>**Stop-Category 0** | **2NO 1NC**<br>**$V_s$ 24 V DC**<br>**auto start** |
| | | **Signaling**<br>**using SIRIUS accessories** |

4

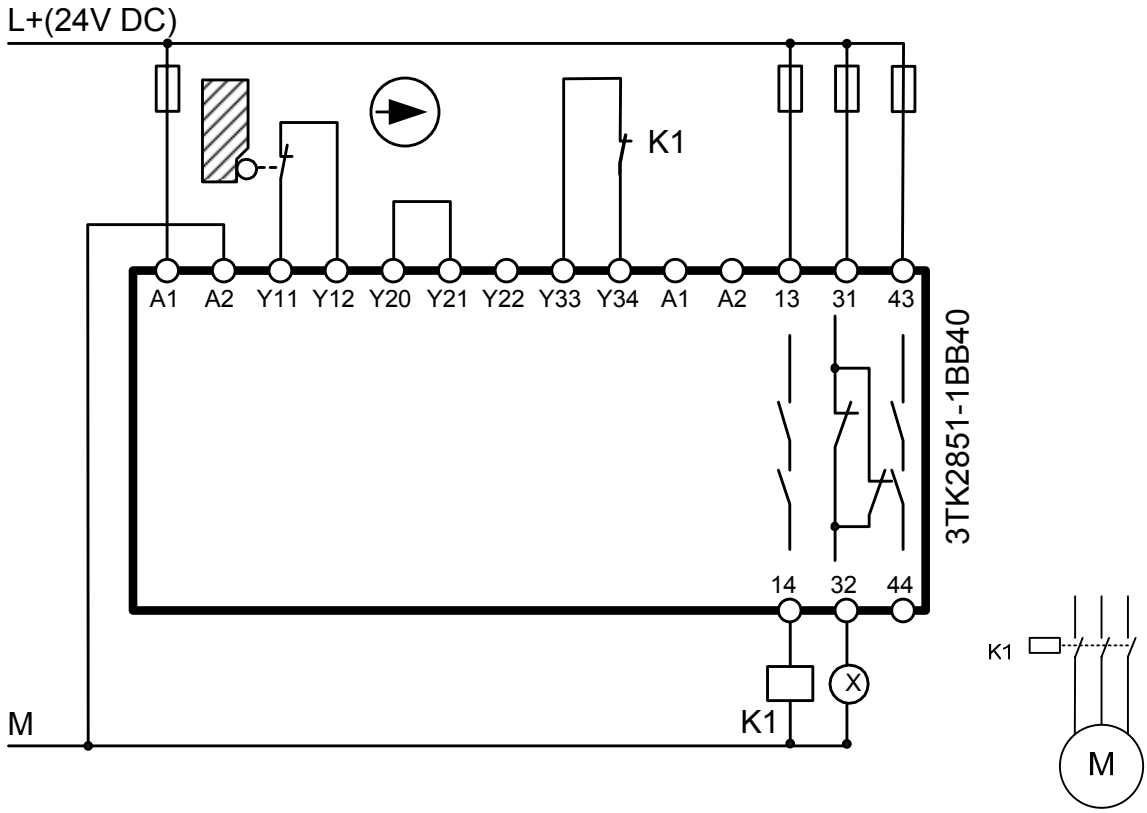


Sensor cables must be routed so that they are protected; only safety-relevant sensors with positively-opening contacts may be used as sensors.

| | | |
|---|---|---|
| **3TK2851** | **Category 3** (acc. EN 954-1)<br>**E-Stop Monitoring**<br>**Stop-Category 0** | **2NO 1NC**<br>**$V_s$ 24 V DC**<br>**monitored start** |
| | | **Signaling**<br>**using SIRIUS accessories** |

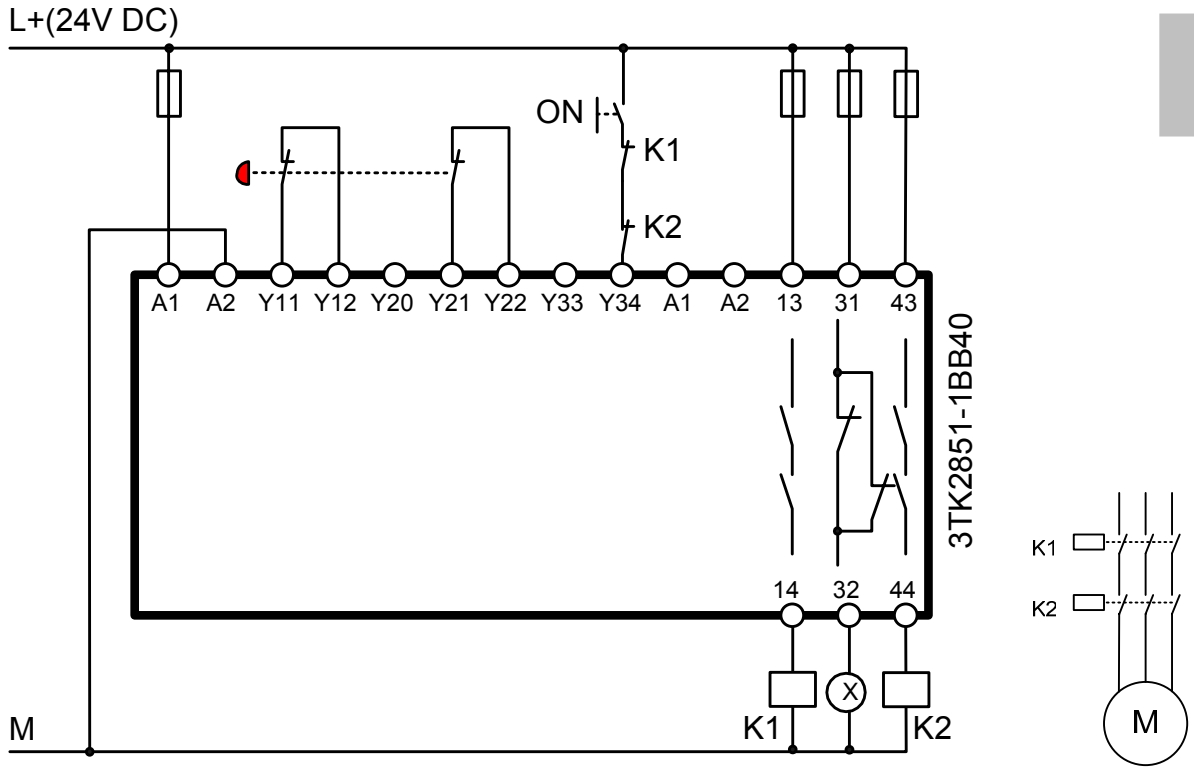


Sensor cables must be routed so that they are protected; only safety-relevant sensors with positively-opening contacts may be used as sensors.

| Safety relay | Function | Comments |
|---|---|---|
| **3TK2851** | **Category 3** (acc. EN 954-1)<br>**protective door**<br>**Monitoring**<br>**Stop-Category 0** | **2NO 1NC**<br>**$V_s$ 24 V DC**<br>**auto start** |
| | | **Signaling**<br>**using SIRIUS accessories** |

4

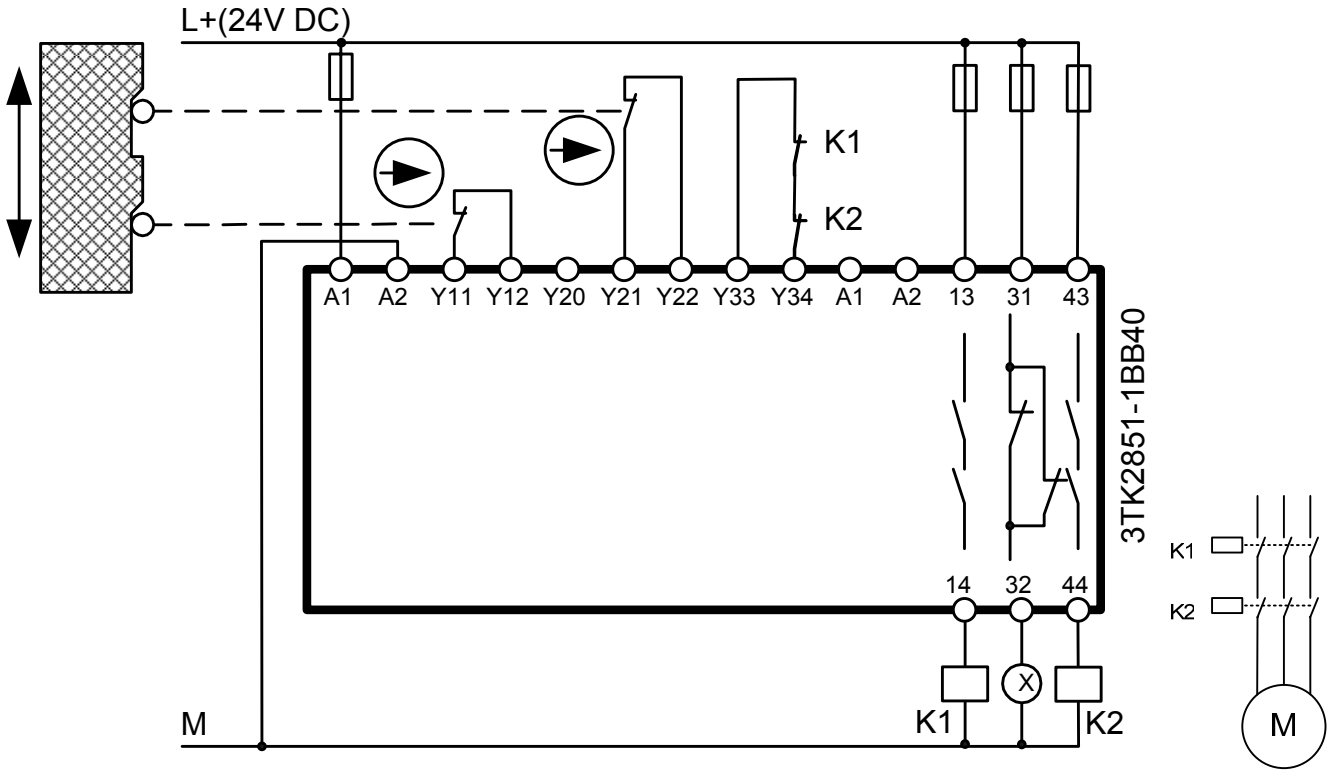


Sensor cables must be routed so that they are protected; only safety-relevant sensors with positively-opening contacts may be used as sensors.

| | | |
|---|---|---|
| **3TK2851-1LA20** | **Category 3** (acc. EN 954-1)<br>**Magnet sensor Monitoring**<br>**Stop-Category 0** | **2NO 1NC**<br>**$V_s$ 230 V AC**<br>**auto start** |
| | | **Signaling using SIRIUS accessories** |



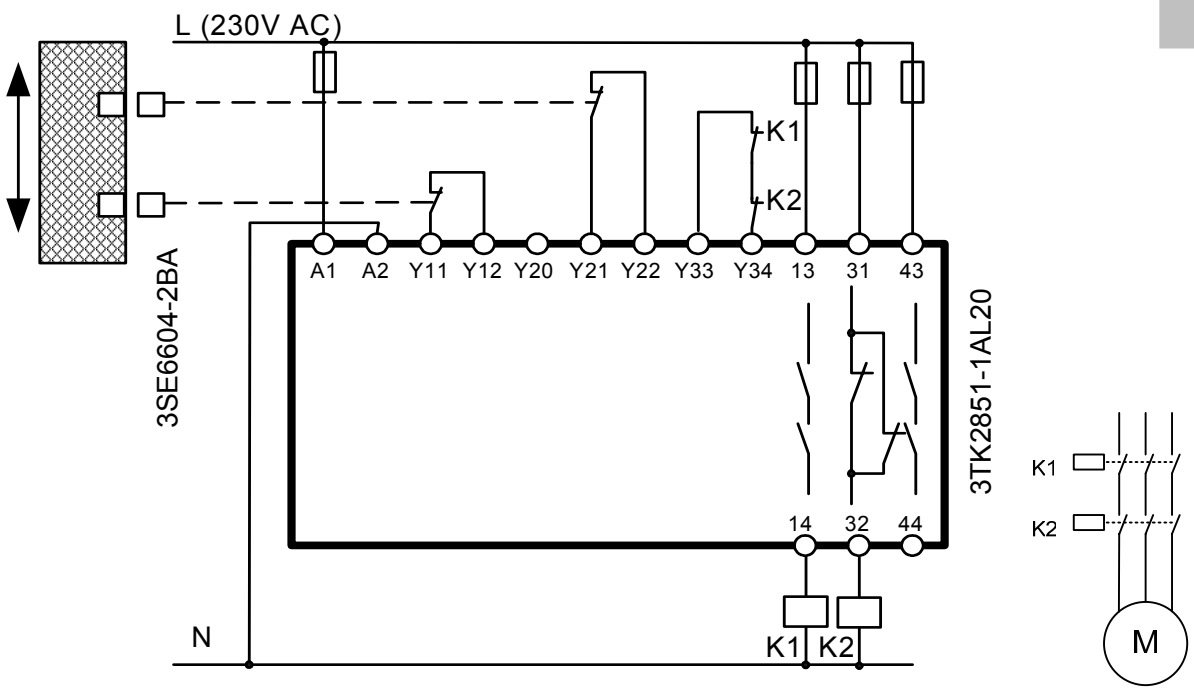


Sensor cables must be routed so that they are protected; only safety-relevant sensors with positively-opening contacts may be used as sensors.

| | | |
|---|---|---|
| **3TK2852** | **Category 2** (acc. EN 954-1)<br>**E-Stop Monitoring**<br>**Stop-Category 0** | **6NO 1NC**<br>**$V_s$ 24 V DC**<br>**monitored start** |
| | | **Signaling using SIRIUS accessories** |

4

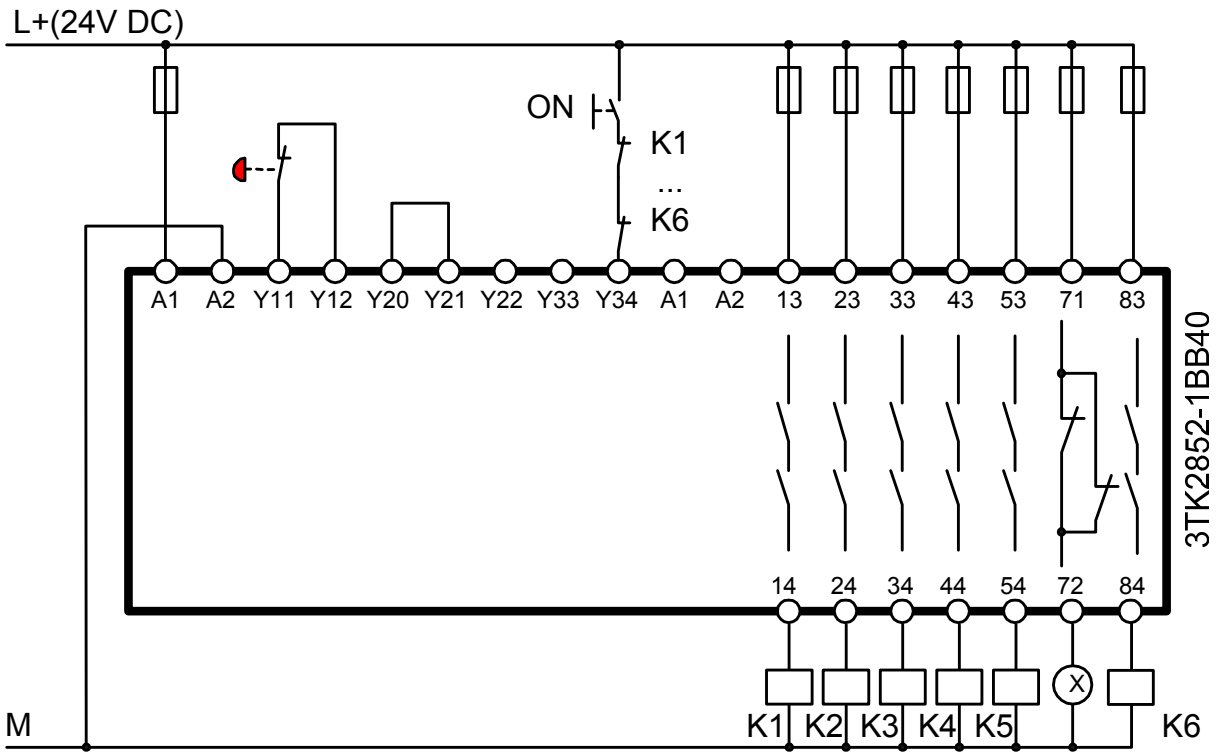


Sensor cables must be routed so that they are protected; only safety-relevant sensors with positively-opening contacts may be used as sensors.

| | | |
|---|---|---|
| **3TK2852** | **Category 2** (acc. EN 954-1)<br>**protective door**<br>**Monitoring**<br>**Stop-Category 0** | **6NO 1NC**<br>**$V_s$ 24 V DC**<br>**auto start** |
| | | **Signaling**<br>**using SIRIUS accessories** |

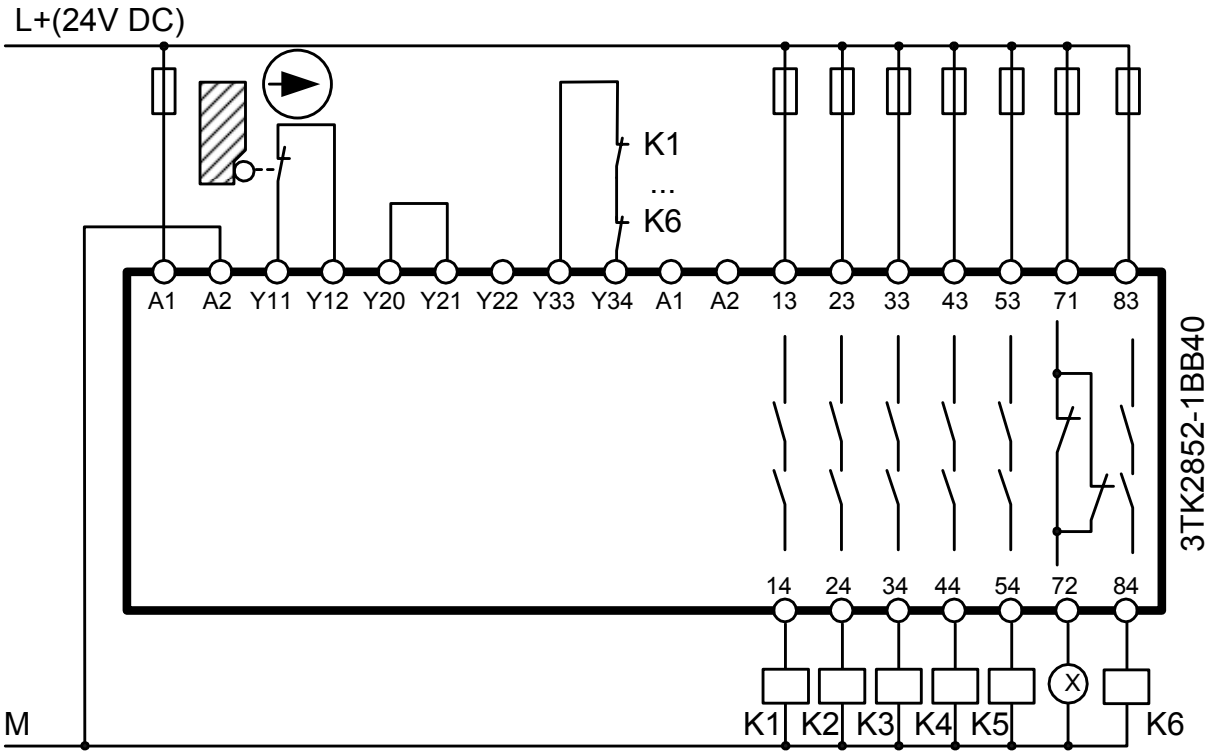


Sensor cables must be routed so that they are protected; only safety-relevant sensors with positively-opening contacts may be used as sensors.

| Safety relay | Function | Comments |
|---|---|---|
| **3TK2852** | **Category 3** (acc. EN 954-1)<br>**E-Stop Monitoring**<br>**Stop-Category 0** | **6NO 1NC**<br>**$V_s$ 24 V DC**<br>**monitored start** |

**Signaling using SIRIUS accessories**

4

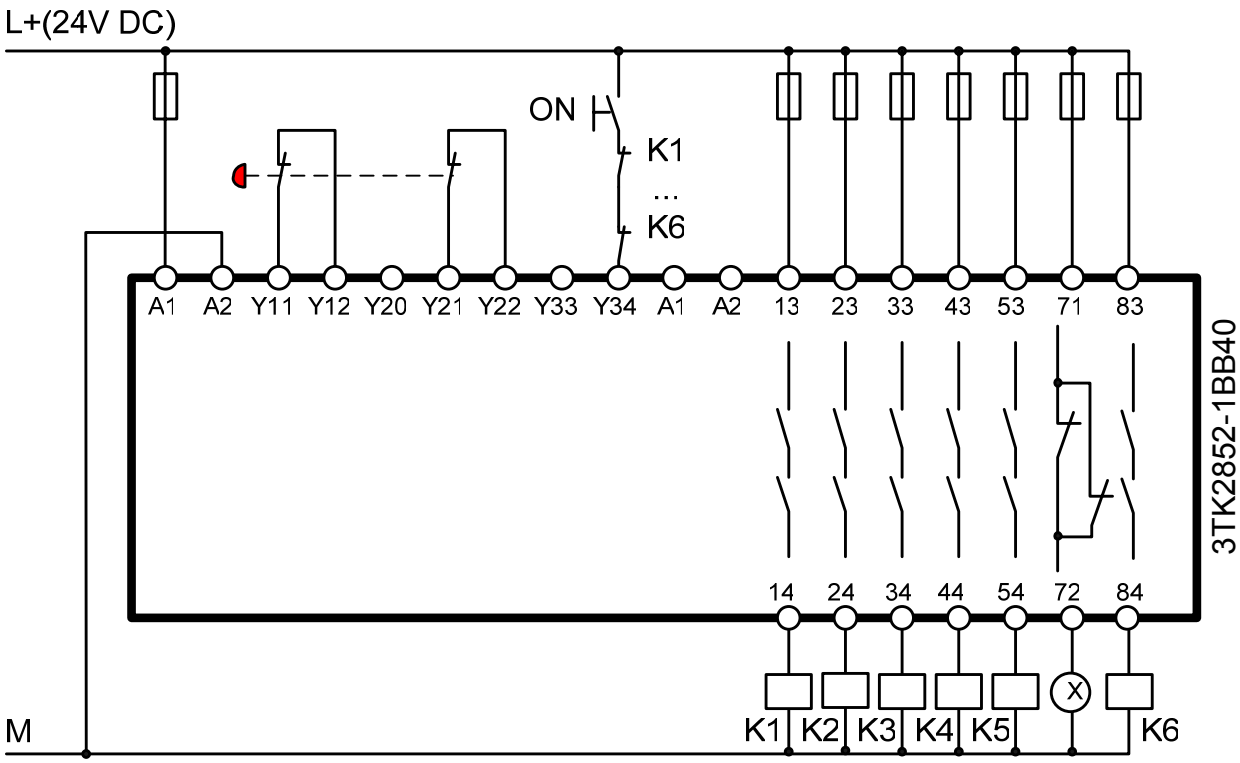


Sensor cables must be routed so that they are protected; only safety-relevant sensors with positively-opening contacts may be used as sensors.

| | | |
|---|---|---|
| **3TK2852** | **Category 3** (acc. EN 954-1)<br>**protective door**<br>**Monitoring**<br>**Stop-Category 0** | **6NO 1NC**<br>**$V_s$ 24 V DC**<br>**auto start** |
| | | **Signaling**<br>**using SIRIUS accessories** |

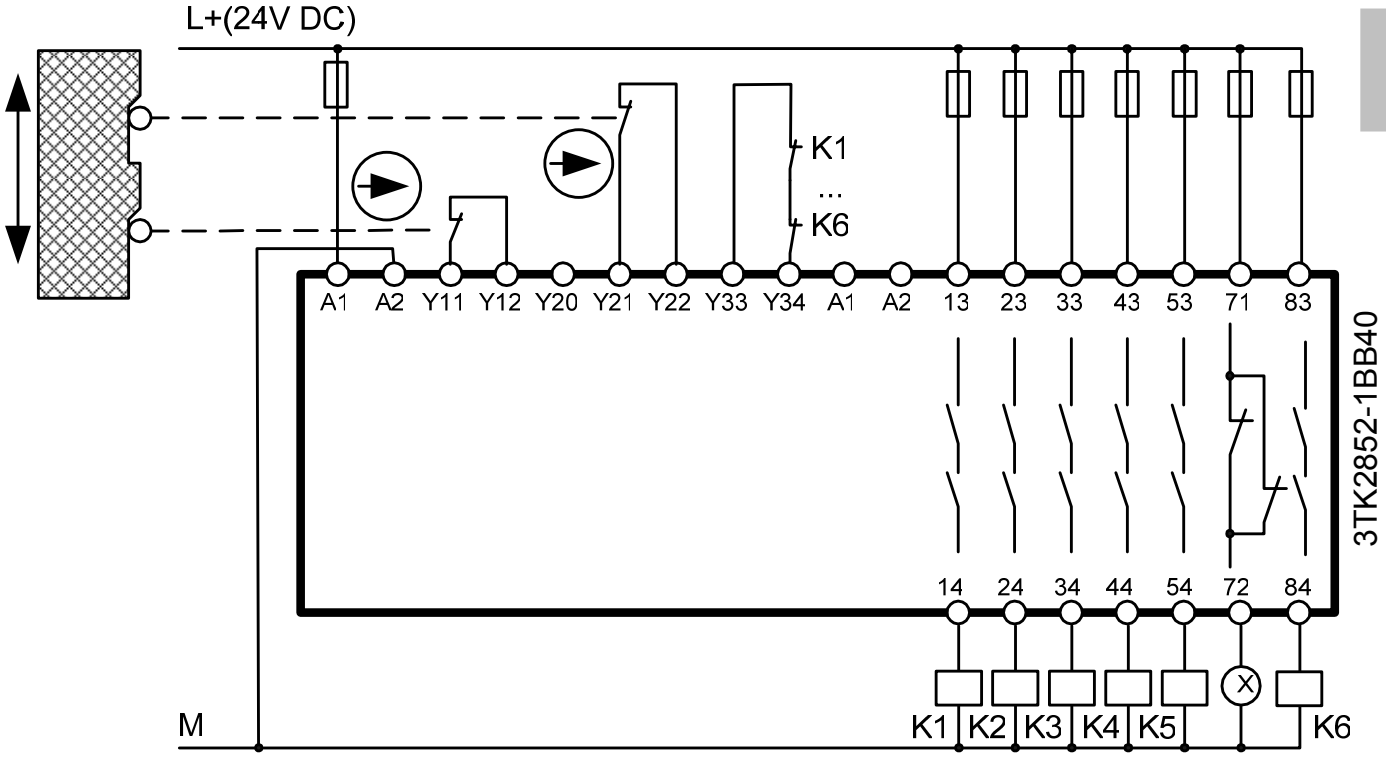


Sensor cables must be routed so that they are protected; only safety-relevant sensors with positively-opening contacts may be used as sensors.

| Safety relay | Function | Comments |
|---|---|---|
| **3TK2852** | **Category 3** (acc. EN 954-1)<br>**Magnet sensor Monitoring**<br>**Stop-Category 0** | **6NO 1NC**<br>**$V_s$ 24 V DC**<br>**auto start** |

**Signaling using SIRIUS accessories**

4

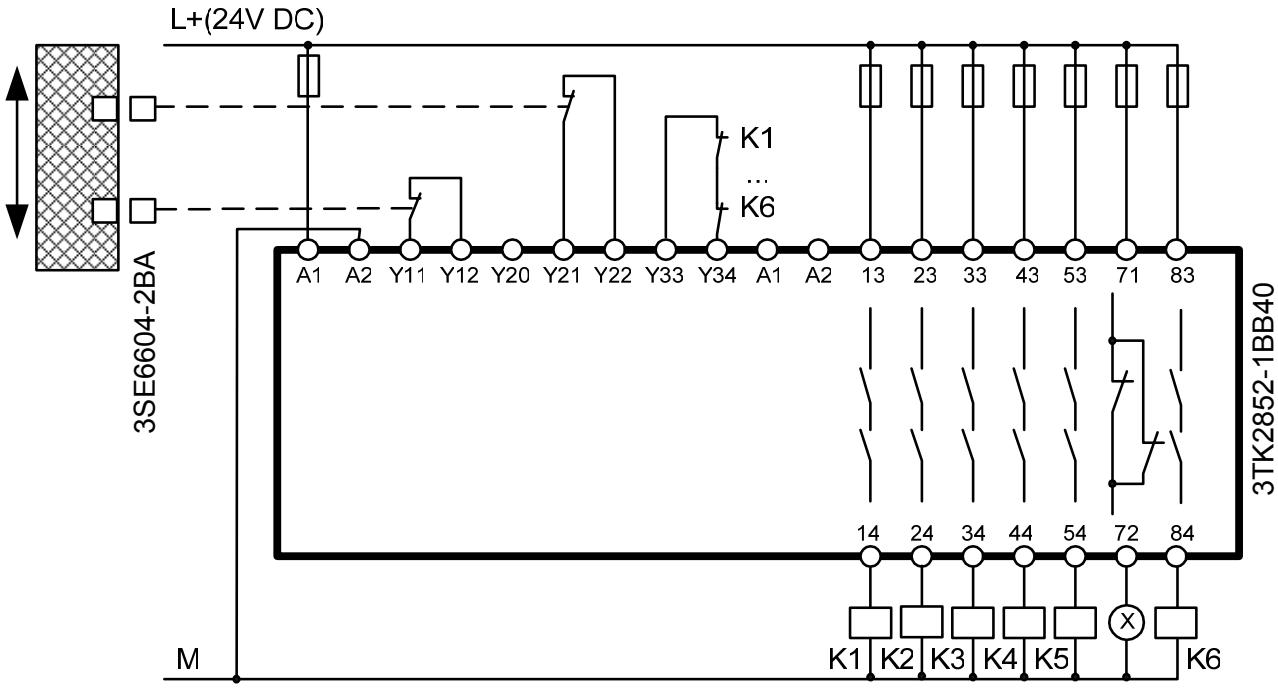


Sensor cables must be routed so that they are protected; only safety-relevant sensors with positively-opening contacts may be used as sensors.

| | | |
|---|---|---|
| **3TK2853** | **Category 2** (acc. EN 954-1)<br>**E-Stop Monitoring**<br>**Stop-Category 0** | **3NO 1NO$_{el}$**<br>**$V_s$ 24 V DC**<br>**monitored start** |
| | | **Signaling using SIRIUS accessories** |

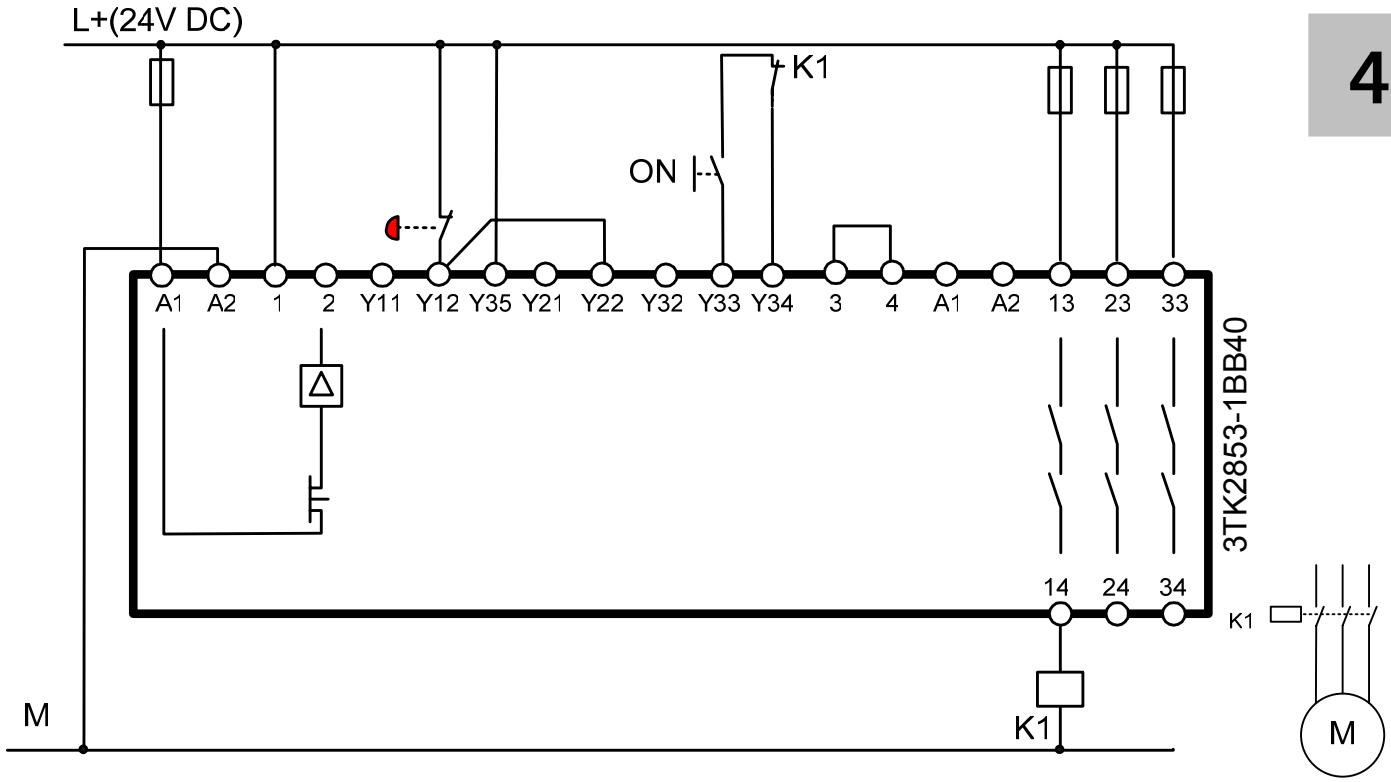


Sensor cables must be routed so that they are protected; only safety-relevant sensors with positively-opening contacts may be used as sensors.

| | | |
|---|---|---|
| **3TK2853** | **Category 2** (acc. EN 954-1)<br>**protective door**<br>**Monitoring**<br>**Stop-Category 0** | **3NO 1NO$_{el}$**<br>**$V_s$ 24 V DC**<br>**auto start** |
| | | **Signaling**<br>**using SIRIUS accessories** |

4

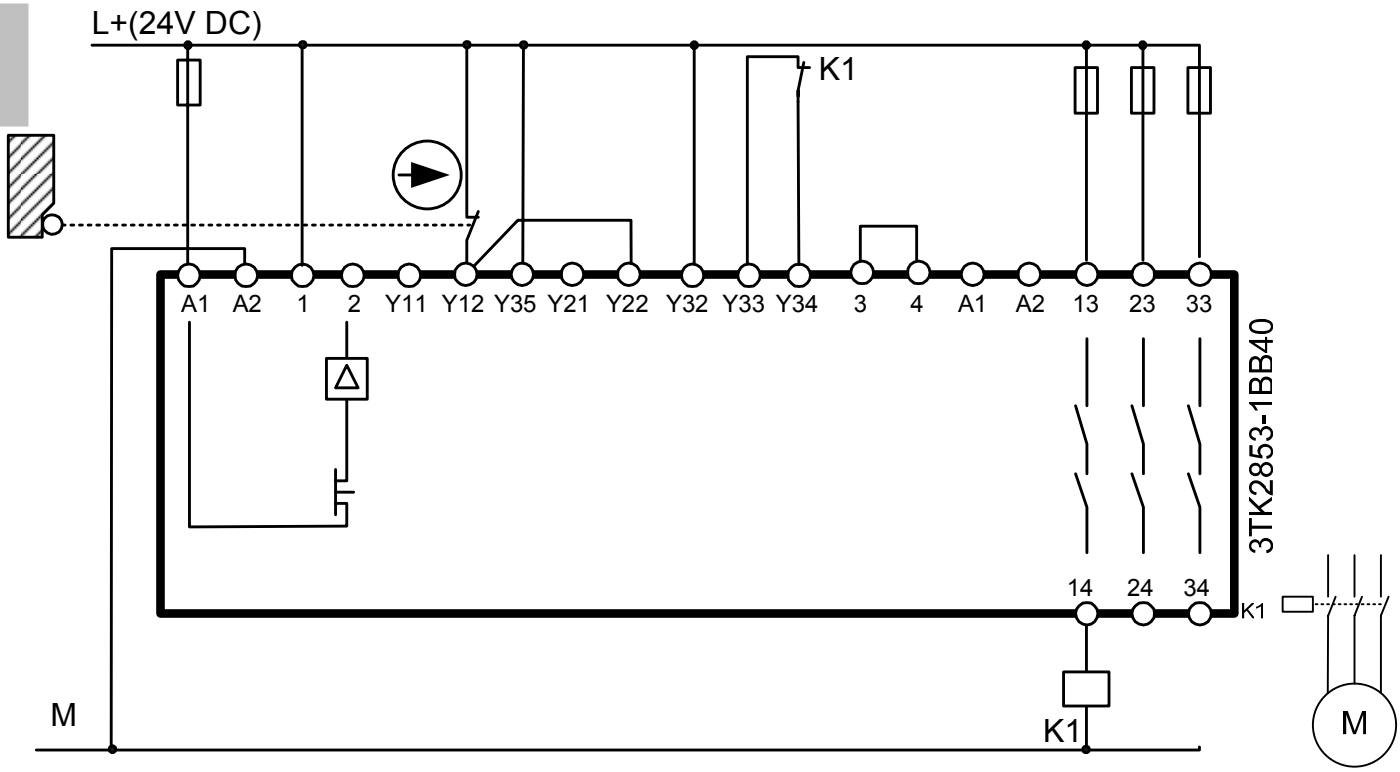


Sensor cables must be routed so that they are protected; only safety-relevant sensors with positively-opening contacts may be used as sensors.

| | | |
|---|---|---|
| **3TK2853** | **Category 4** (acc. EN 954-1)<br>**E-Stop Monitoring**<br>**Stop-Category 0** | **3NO 1NO$_{el}$**<br>**$V_s$ 24 V DC**<br>**monitored start** |
| | | **Signaling**<br>**using SIRIUS accessories** |

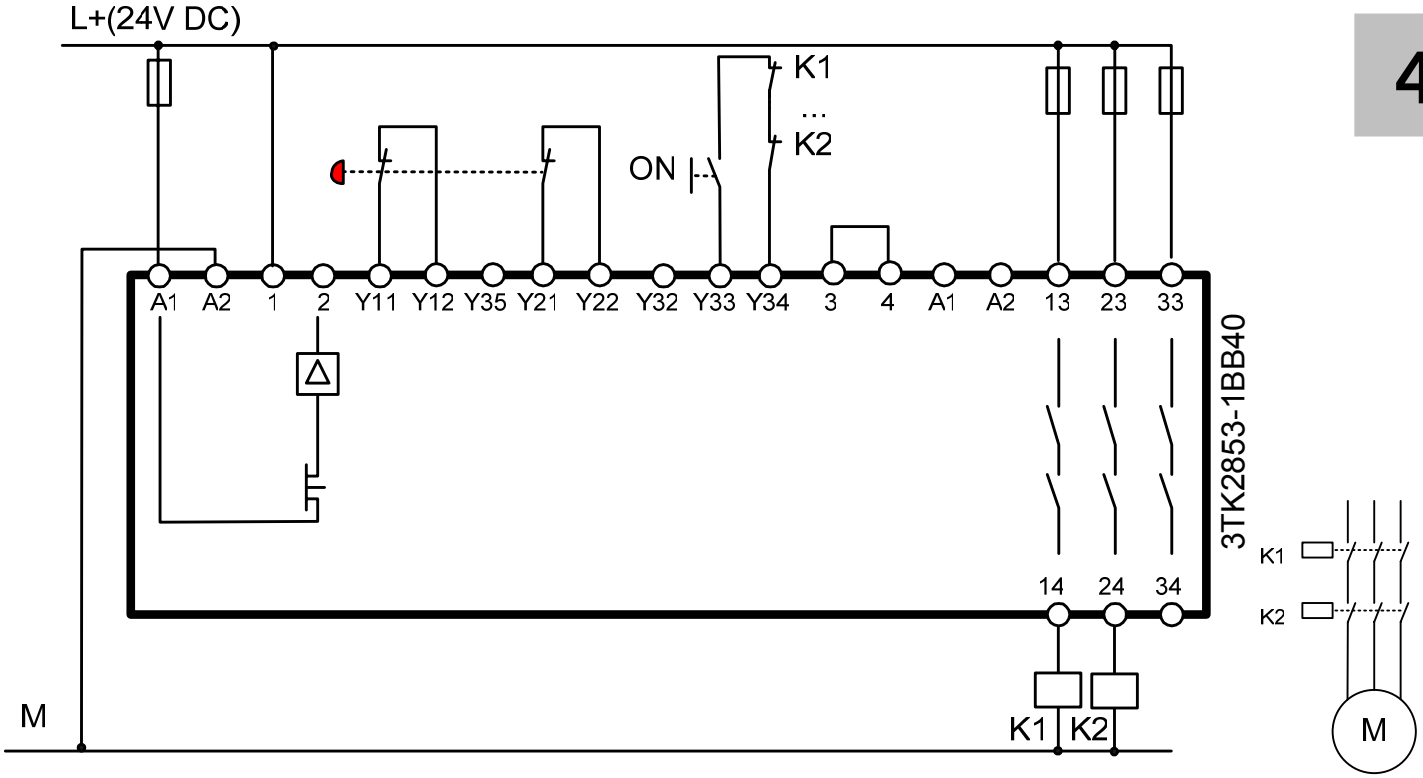


Sensor cables must be routed so that they are protected; only safety-relevant sensors with positively-opening contacts may be used as sensors.

| | | |
|---|---|---|
| **3TK2853** | **Category 4** (acc. EN 954-1)<br>**protective door**<br>**Monitoring**<br>**Stop-Category 0** | **3NO 1NO$_{el}$**<br>**$V_s$ 24 V DC**<br>**auto start** |

**Signaling**
**using SIRIUS accessories**

4

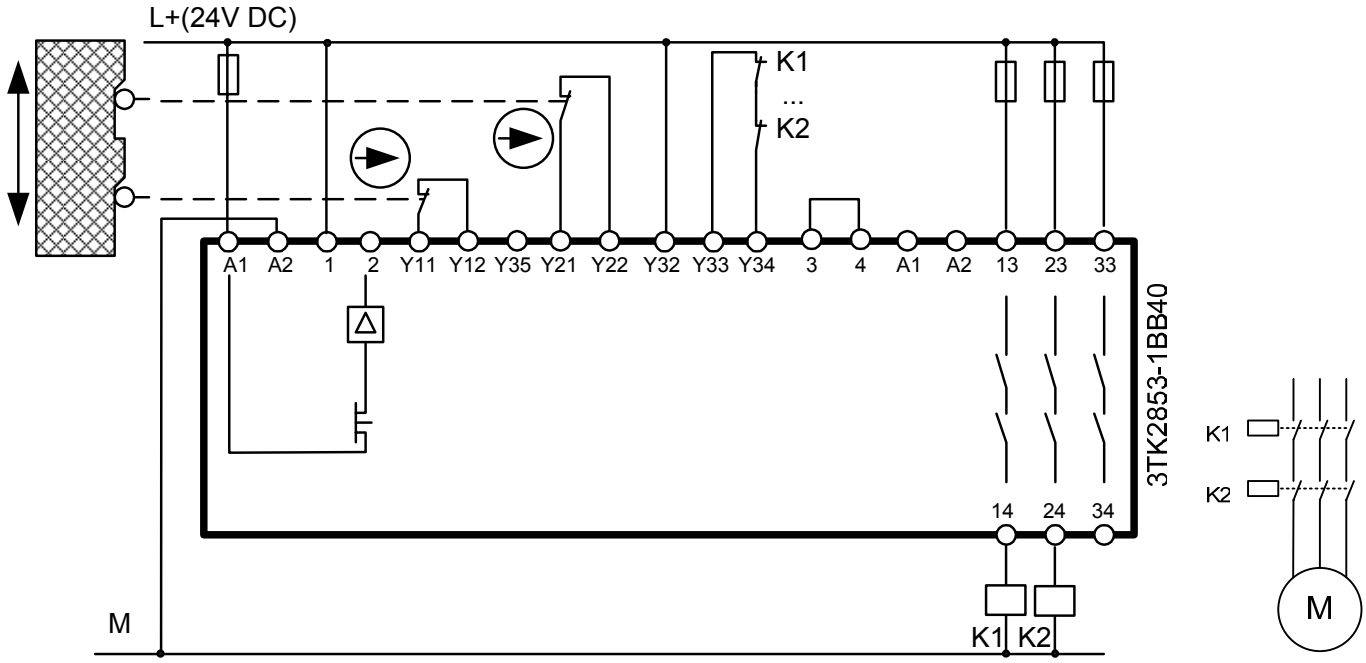


For Category 4, it is not permissible to connect several position switches in series to implement a protective door monitoring function (due to an inadequate level of fault detection).

Sensor cables must be routed so that they are protected; only safety-relevant sensors with positively-opening contacts may be used as sensors.

| | | |
|---|---|---|
| **3TK2853** | **Category 4** (acc. EN 954-1)<br>**Magnet sensor Monitoring**<br>**Stop-Category 0** | **3NO 1NO$_{el}$**<br>**$V_s$ 24 V DC**<br>**auto start** |

**Signaling using SIRIUS accessories**



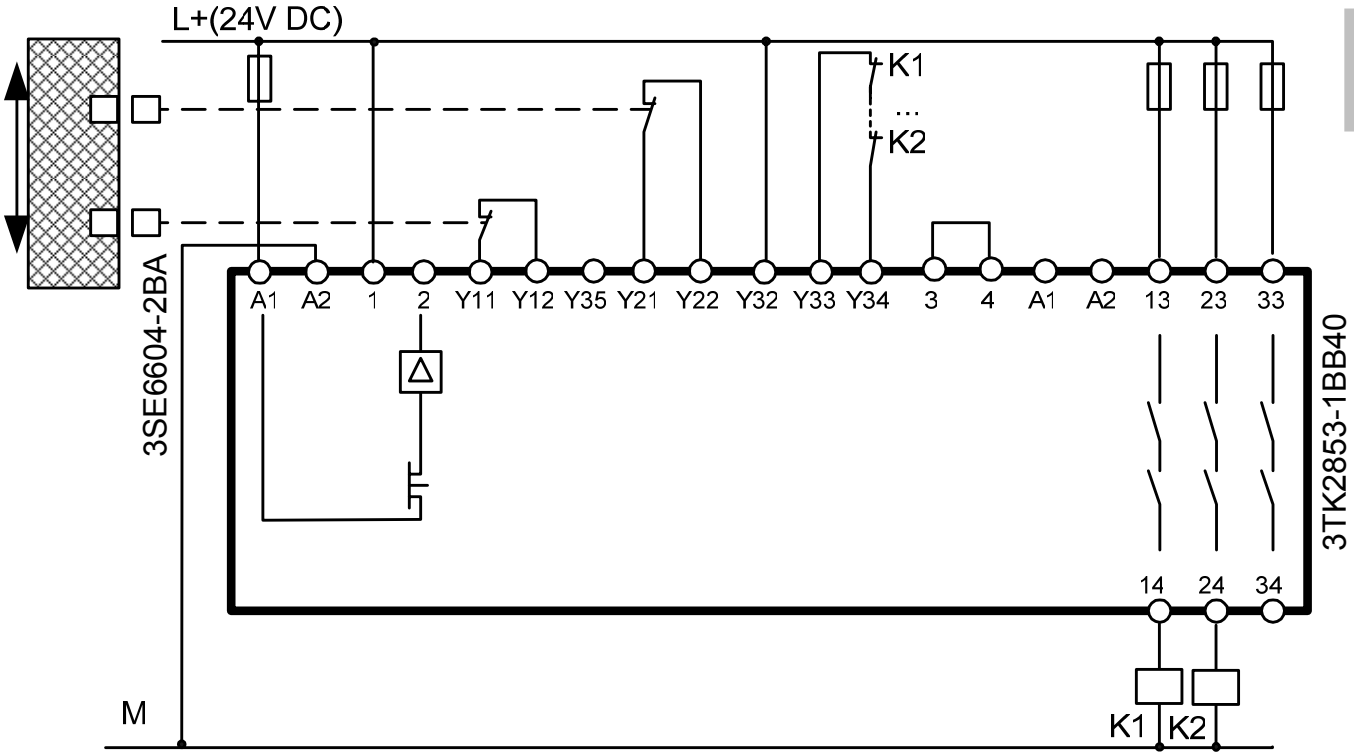


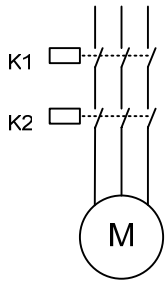


Sensor cables must be routed so that they are protected; only safety-relevant sensors with positively-opening contacts may be used as sensors.

| | | |
|---|---|---|
| **3TK2853** | **Category 4** (acc. EN 954-1)<br>**Light grid Monitoring**<br>**Stop-Category 0** | **3NO 1NO$_{el}$**<br>**V$_s$ 24 V DC**<br>**auto start** |

**Signaling using SIRIUS accessories**

4

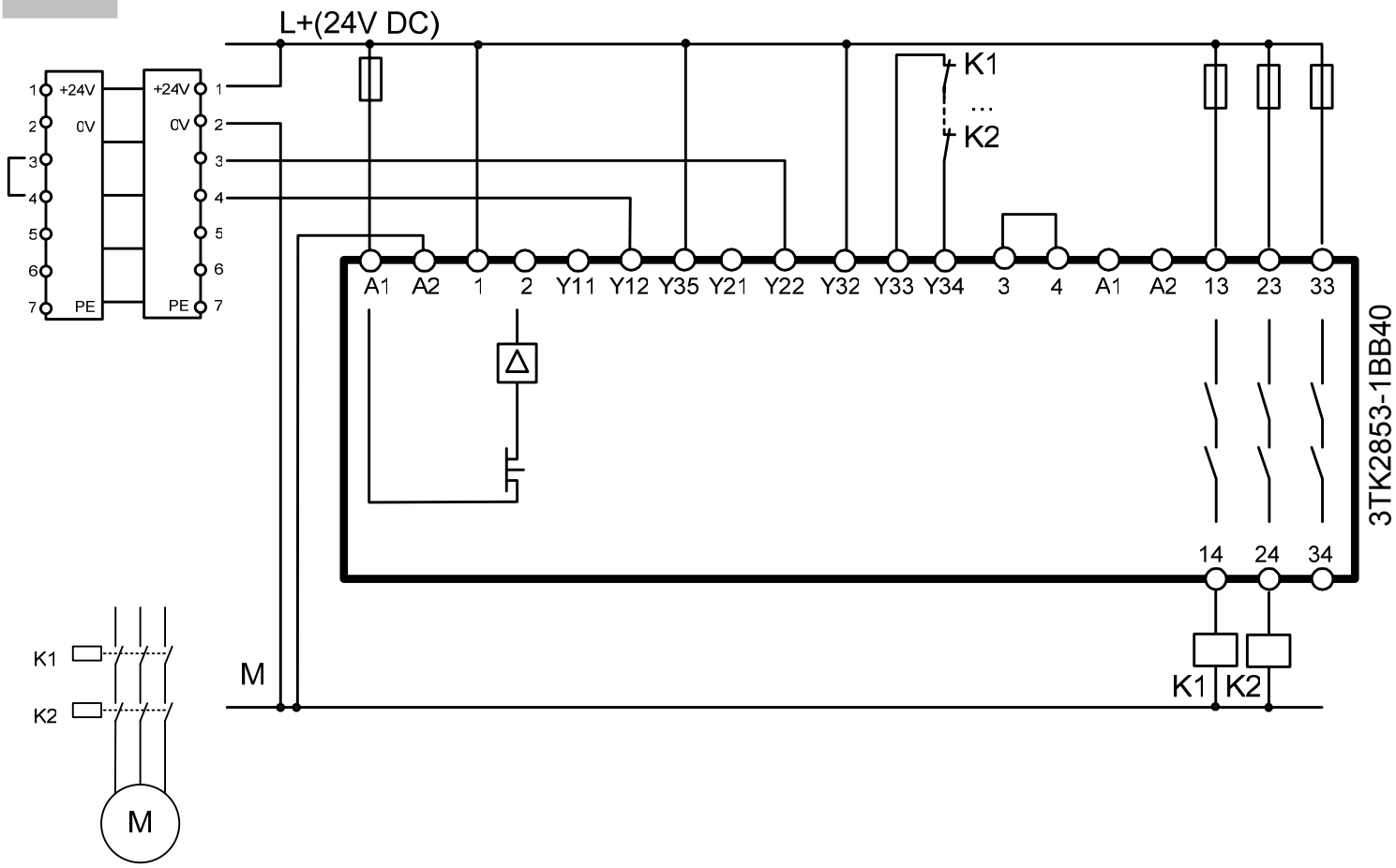


Sensor cables must be routed so that they are protected; only safety-relevant sensors with positively-opening contacts may be used as sensors.

| | | |
|---|---|---|
| **3TK2853** | **Category 3** (acc. EN 954-1)<br>**Safety mat Monitoring**<br>**Stop-Category 0** | **3NO 1NO$_{el}$**<br>**$V_s$ 24 V DC**<br>**auto start** |

**Signaling using SIRIUS accessories**



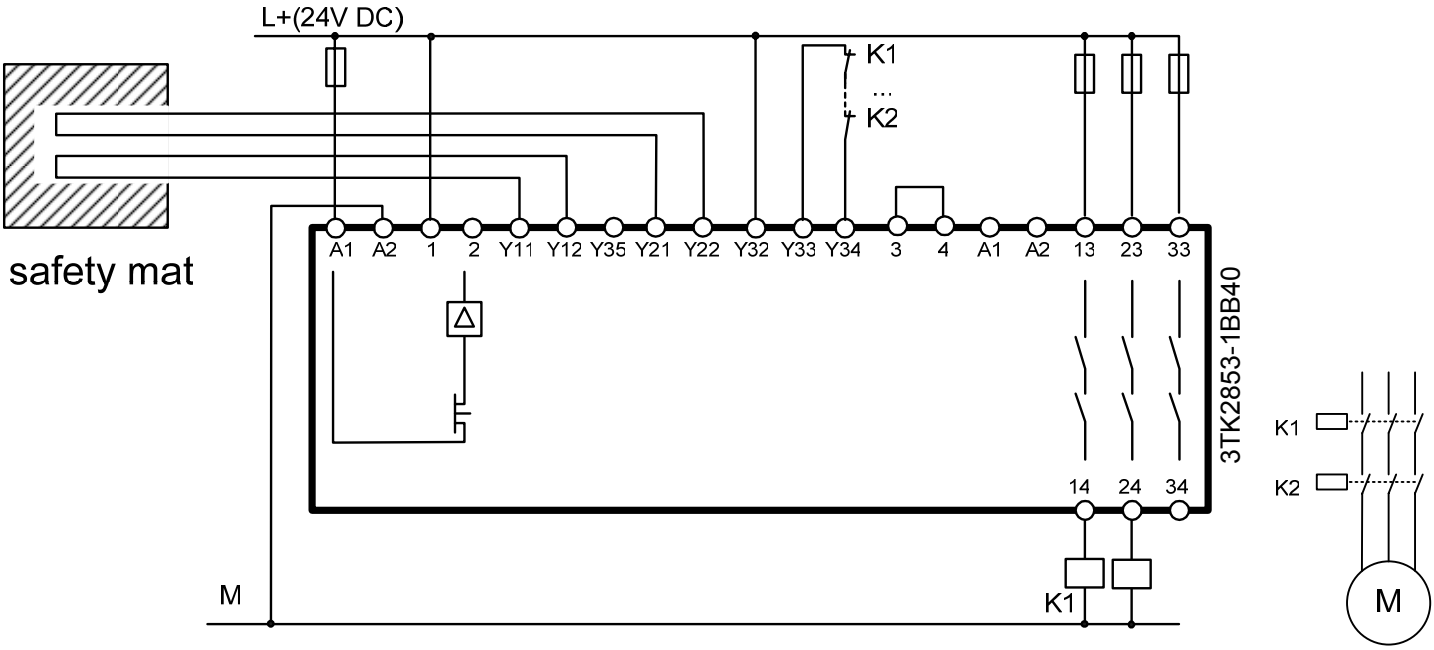


Category 3 according to EN 954-1 of this circuit is as a result of the safety mat.

Sensor cables must be routed so that they are protected; only safety-relevant sensors with positively-opening contacts may be used as sensors.

| Safety relay | Function | Comments |
|---|---|---|
| **3TK2853 + 3TK2856** | **Category 4** (acc. EN 954-1)<br>**E-Stop Monitoring**<br>**Stop-Category 0** | **9NO 1NO$_{el}$**<br>**V$_s$ 24 V DC**<br>**monitored start** |

**Signaling using SIRIUS accessories**

4

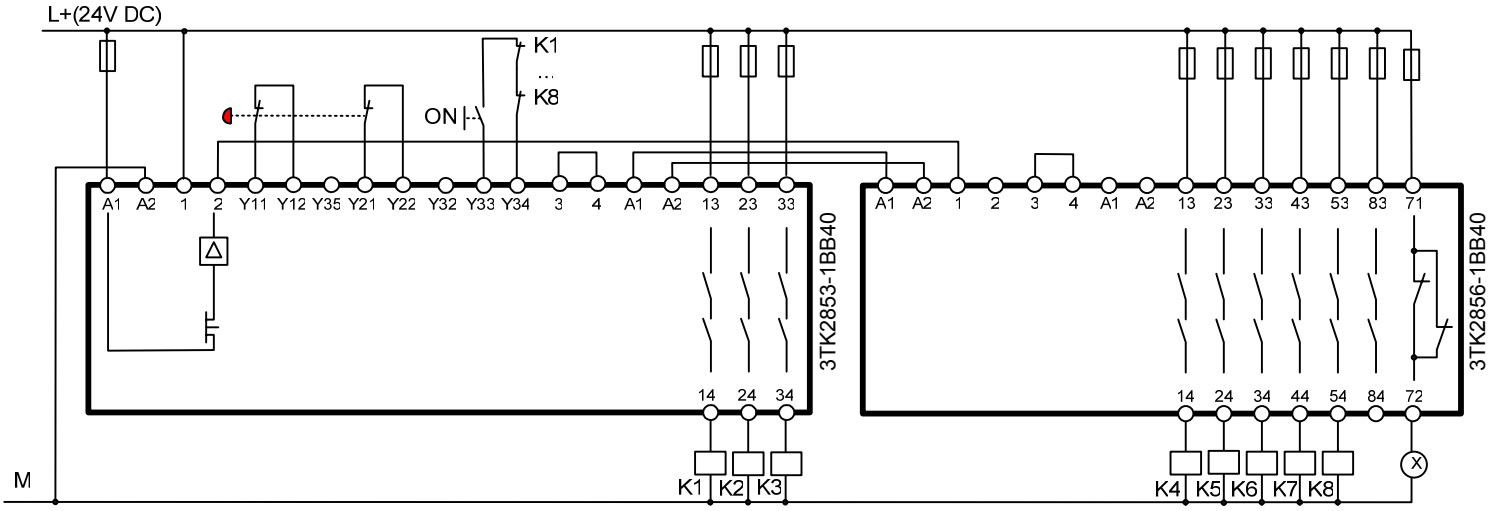


For Category 4, several EMERGENCY STOP commanding devices may be connected in series.

Sensor cables must be routed so that they are protected; only safety-relevant sensors with positively-opening contacts may be used as sensors.

| Safety relay | Function | Comments |
|---|---|---|
| **3TK2853 + 3TK2857** | **Category 4** (acc. EN 954-1)<br>**protective door**<br>**Monitoring**<br>**Stop-Category 0** | **3NO 1NO$_{el}$ 3NO$_{tv}$**<br>**V$_s$ 24 V DC**<br>**auto start**<br><br>**Signaling using SIRIUS accessories** |



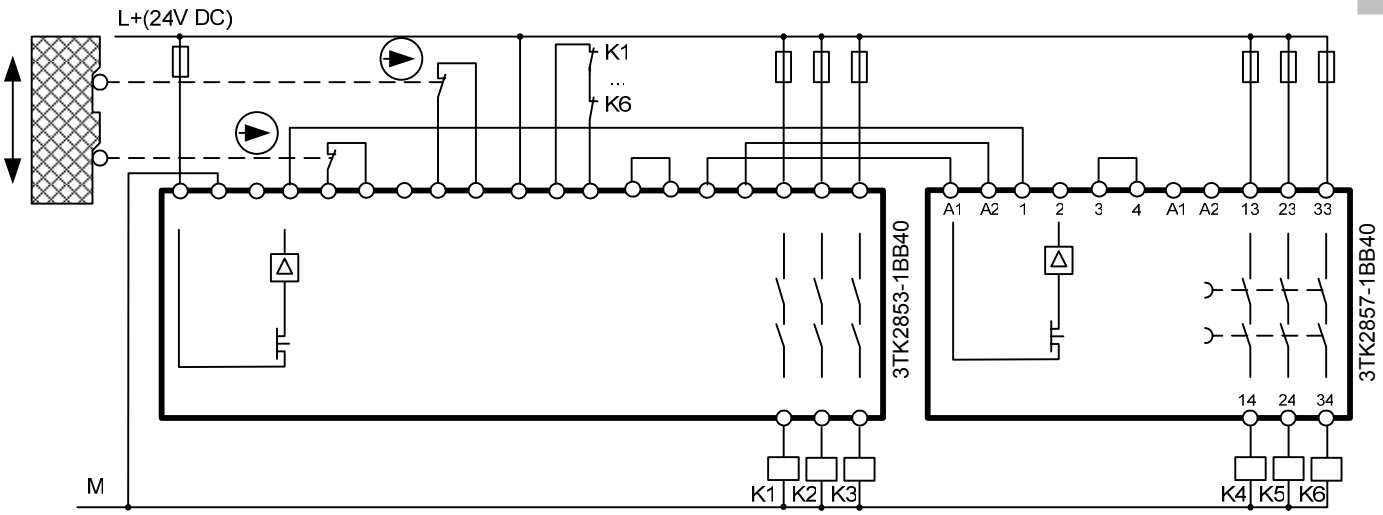


For Category 4, it is not permissible to connect several position switches in series to implement a protective door monitoring function (due to an inadequate level of fault detection).

Sensor cables must be routed so that they are protected; only safety-relevant sensors with positively-opening contacts may be used as sensors.

# 3RA71.

# Safe load feeders

| Safety relay | Function | Comments |
|---|---|---|
| **3RA710-...-0AL2** | **Category 2** (acc. EN 954-1)<br>**E-Stop Monitoring**<br>**Stop-Category 0** | **3NO**<br>**$V_s$ 230 V AC**<br>**monitored start** |
| | | **Signaling using SIRIUS accessories** |

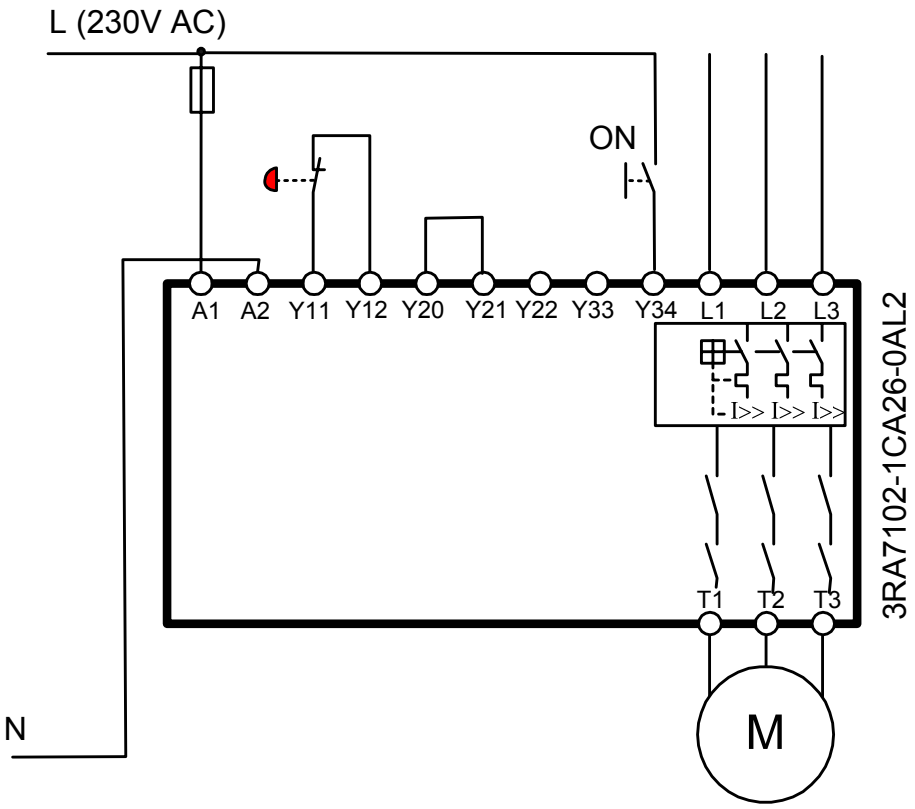


Sensor cables must be routed so that they are protected; only safety-relevant sensors with positively-opening contacts may be used as sensors.

| Safety relay | Function | Comments |
|---|---|---|
| **3RA710-...-0AL2** | **Category 2** (acc. EN 954-1)<br>**protective door**<br>**Monitoring**<br>**Stop-Category 0** | **3NO**<br>**$V_s$ 230 V AC**<br>**auto start**<br><br>**Signaling**<br>**using SIRIUS accessories** |

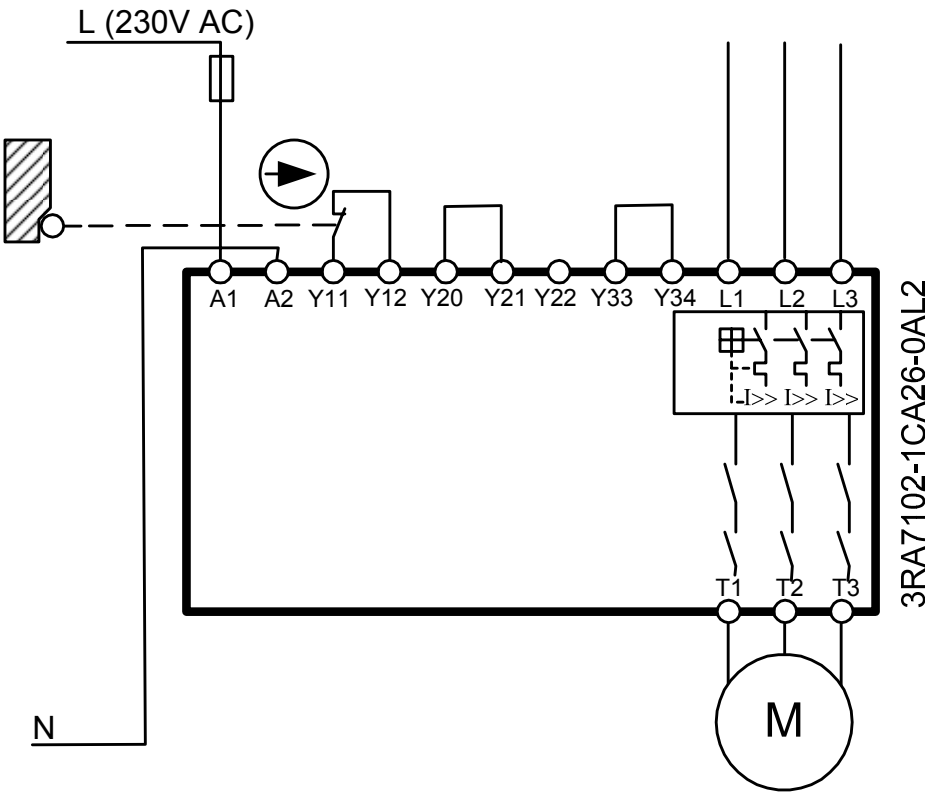


Sensor cables must be routed so that they are protected; only safety-relevant sensors with positively-opening contacts may be used as sensors.

| | | |
|---|---|---|
| **3RA710-...-0AL2** | **Category 3** (acc. EN 954-1)<br>**E-Stop Monitoring**<br>**Stop-Category 0** | **3NO**<br>**$V_s$ 230 V AC**<br>**monitored start** |
| | | **Signaling**<br>**using SIRIUS accessories** |

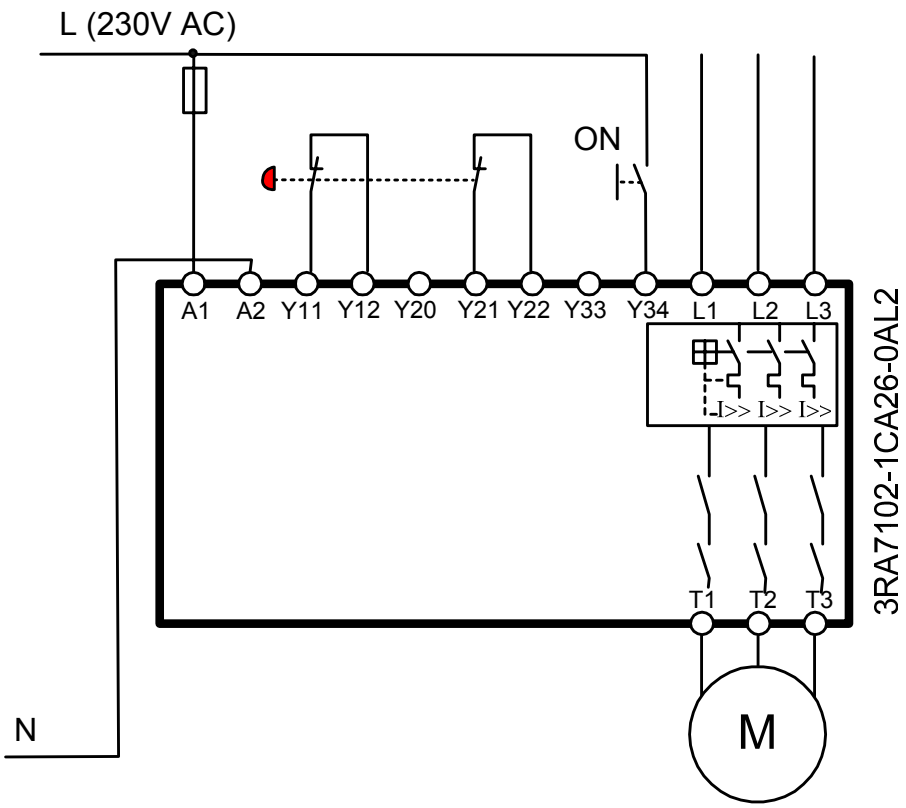


Sensor cables must be routed so that they are protected; only safety-relevant sensors with positively-opening contacts may be used as sensors.

| Safety relay | Function | Comments |
|---|---|---|
| **3RA710-...-0AL2** | **Category 3** (acc. EN 954-1)<br>**protective door**<br>**Monitoring**<br>**Stop-Category 0** | **3NO**<br>**$V_s$ 230 V AC**<br>**auto start**<br><br>**Signaling**<br>**using SIRIUS accessories** |

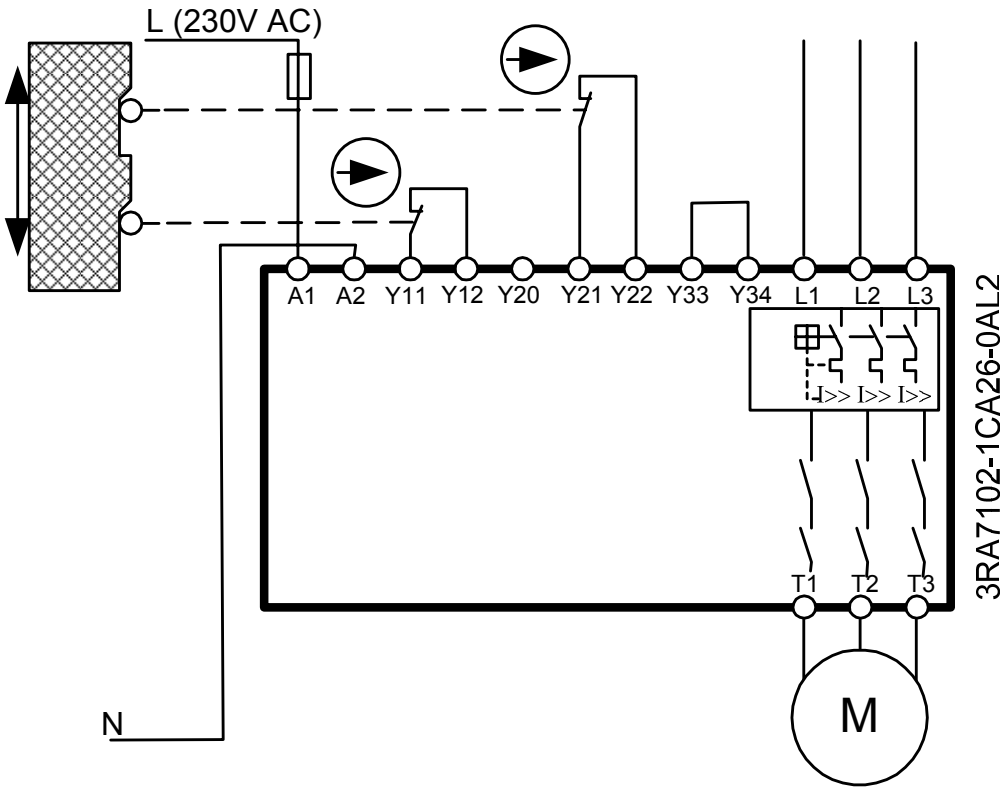


Sensor cables must be routed so that they are protected; only safety-relevant sensors with positively-opening contacts may be used as sensors.

| Safety relay | Function | Comments |
|---|---|---|
| **3RA710-...-0AL2** | **Category 3** (acc. EN 954-1)<br>**Magnet sensor Monitoring**<br>**Stop-Category 0** | **3NO**<br>**$V_s$ 230 V AC**<br>**auto start** |

**Signaling using SIRIUS accessories**

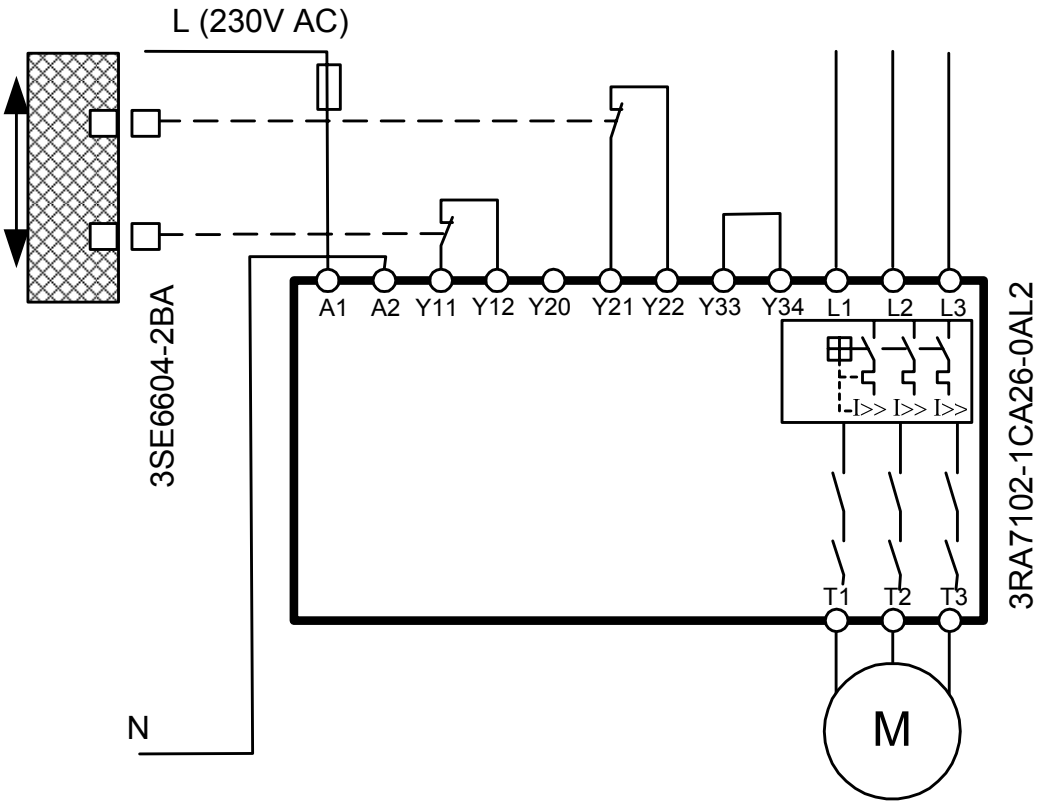


Sensor cables must be routed so that they are protected; only safety-relevant sensors with positively-opening contacts may be used as sensors.

| | | |
|---|---|---|
| **3RA711** | **Category 2** (acc. EN 954-1)<br>**E-Stop Monitoring**<br>**Stop-Category 0** | **3NO 1NO$_{el}$**<br>**$V_s$ 24 V DC**<br>**monitored start** |

**Signaling using SIRIUS accessories**

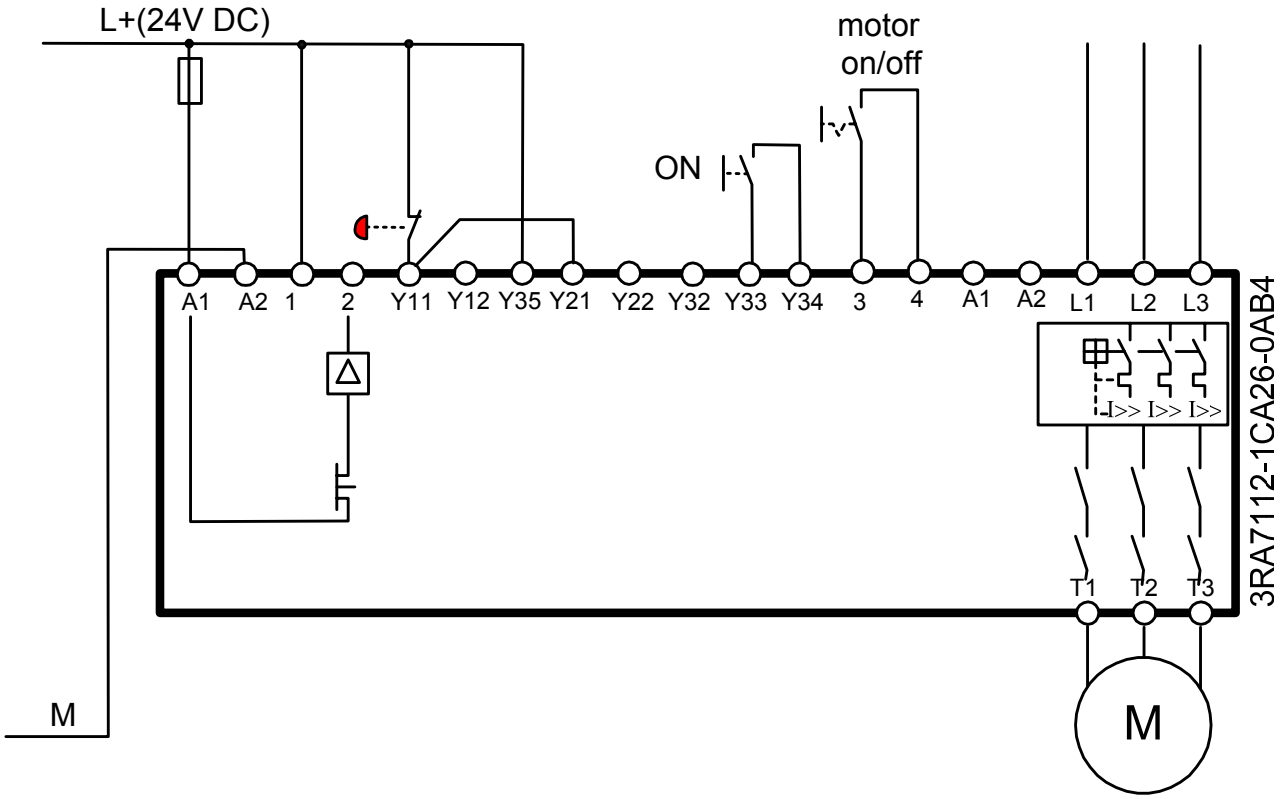


Sensor cables must be routed so that they are protected; only safety-relevant sensors with positively-opening contacts may be used as sensors.

| | | |
|---|---|---|
| **3RA711** | **Category 2** (acc. EN 954-1)<br>**protective door**<br>**Monitoring**<br>**Stop-Category 0** | **3NO 1NO$_{el}$**<br>**$V_s$ 24 V DC**<br>**auto start** |
| | | **Signaling**<br>**using SIRIUS accessories** |

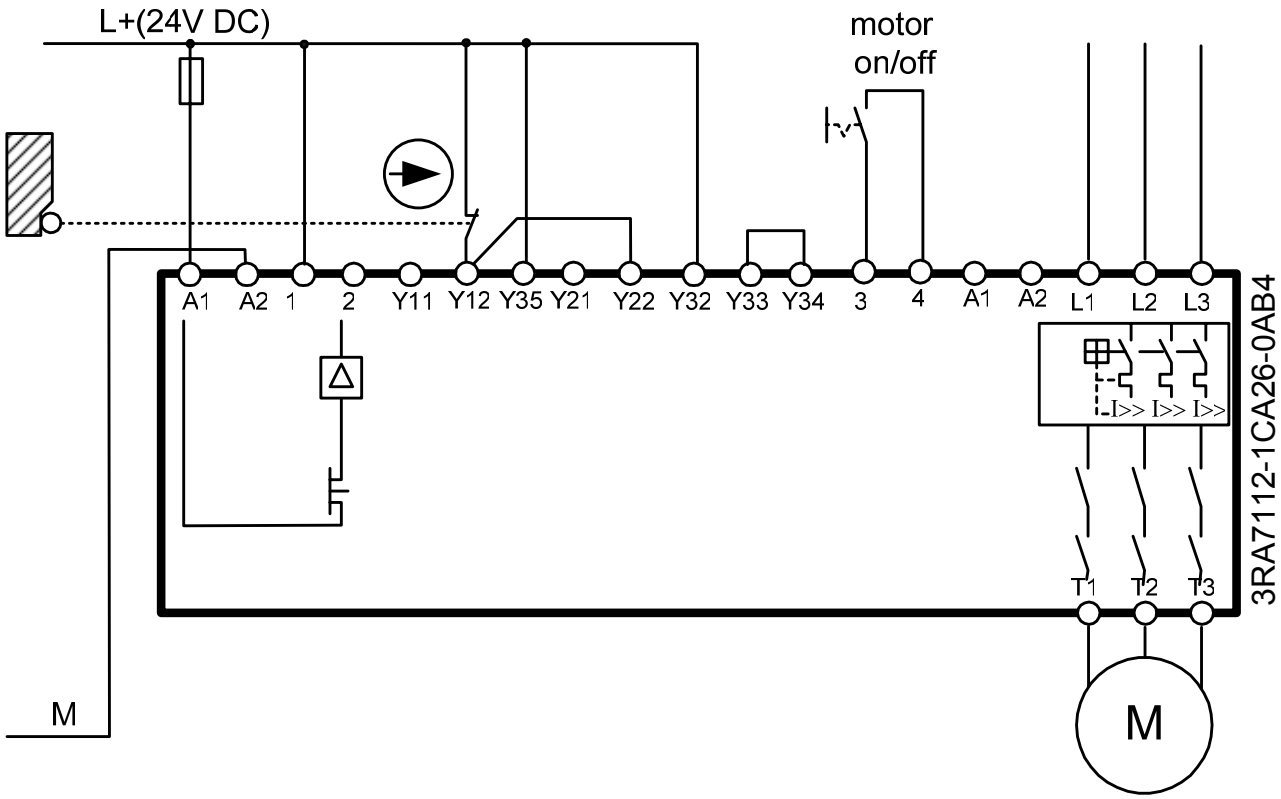


Sensor cables must be routed so that they are protected; only safety-relevant sensors with positively-opening contacts may be used as sensors.

| | | |
|---|---|---|
| **3RA711** | **Category 4** (acc. EN 954-1)<br>**E-Stop Monitoring**<br>**Stop-Category 0** | **3NO 1NO$_{el}$**<br>**$V_s$ 24 V DC**<br>**monitored start** |

**Signaling using SIRIUS accessories**

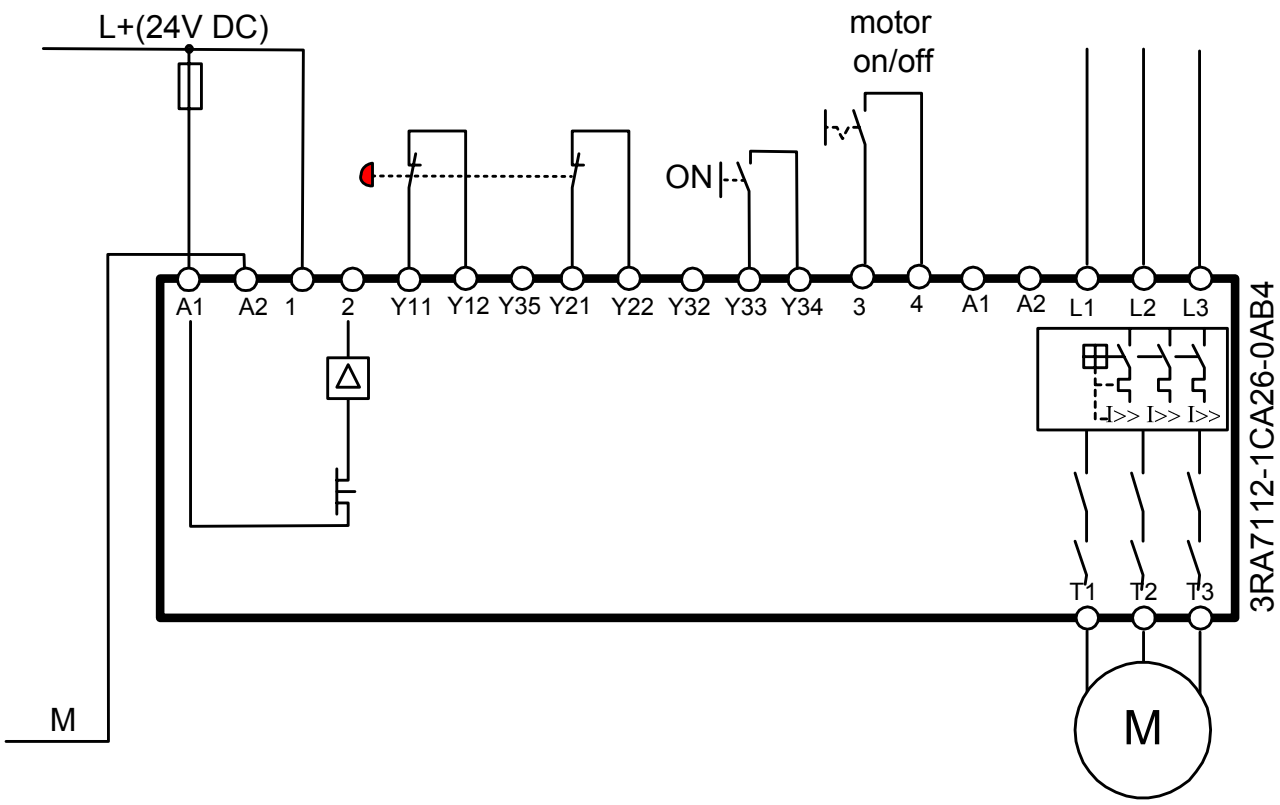


For Category 4, several EMERGENCY STOP commanding devices may be connected in series.

Sensor cables must be routed so that they are protected; only safety-relevant sensors with positively-opening contacts may be used as sensors.

| | | |
|---|---|---|
| **3RA711** | **Category 4** (acc. EN 954-1)<br>**protective door**<br>**Monitoring**<br>**Stop-Category 0** | **3NO 1NO$_{el}$**<br>**$V_s$ 24 V DC**<br>**auto start** |
| | | **Signaling**<br>**using SIRIUS accessories** |

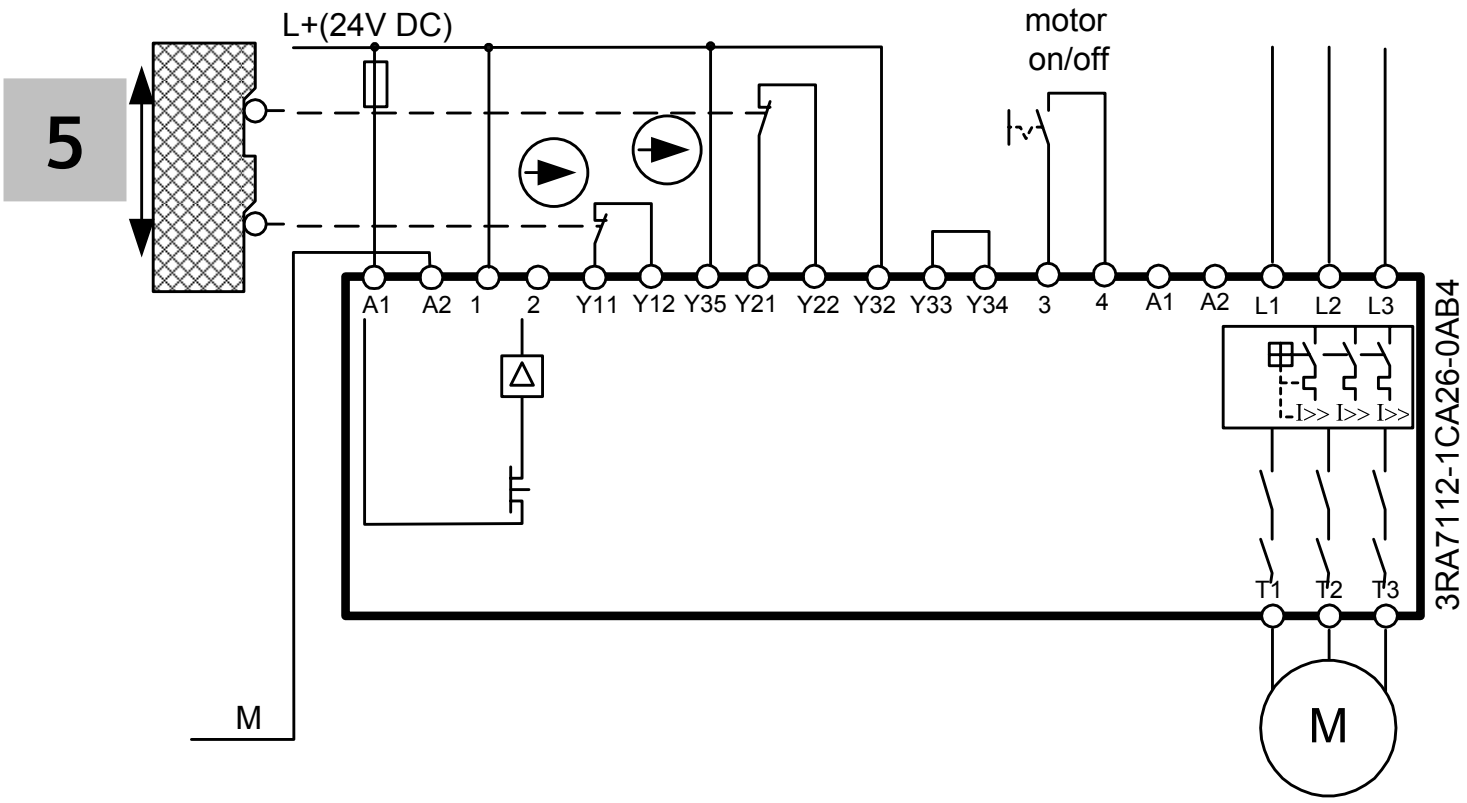


For Category 4, it is not permissible to connect several position switches in series to implement a protective door monitoring function (due to an inadequate level of fault detection).

Sensor cables must be routed so that they are protected; only safety-relevant sensors with positively-opening contacts may be used as sensors.

| | | |
|---|---|---|
| **3RA711** | **Category 4** (acc. EN 954-1)<br>**Magnet sensor Monitoring**<br>**Stop-Category 0** | **3NO 1NO$_{el}$**<br>**$V_s$ 24 V DC**<br>**auto start** |

**Signaling using SIRIUS accessories**



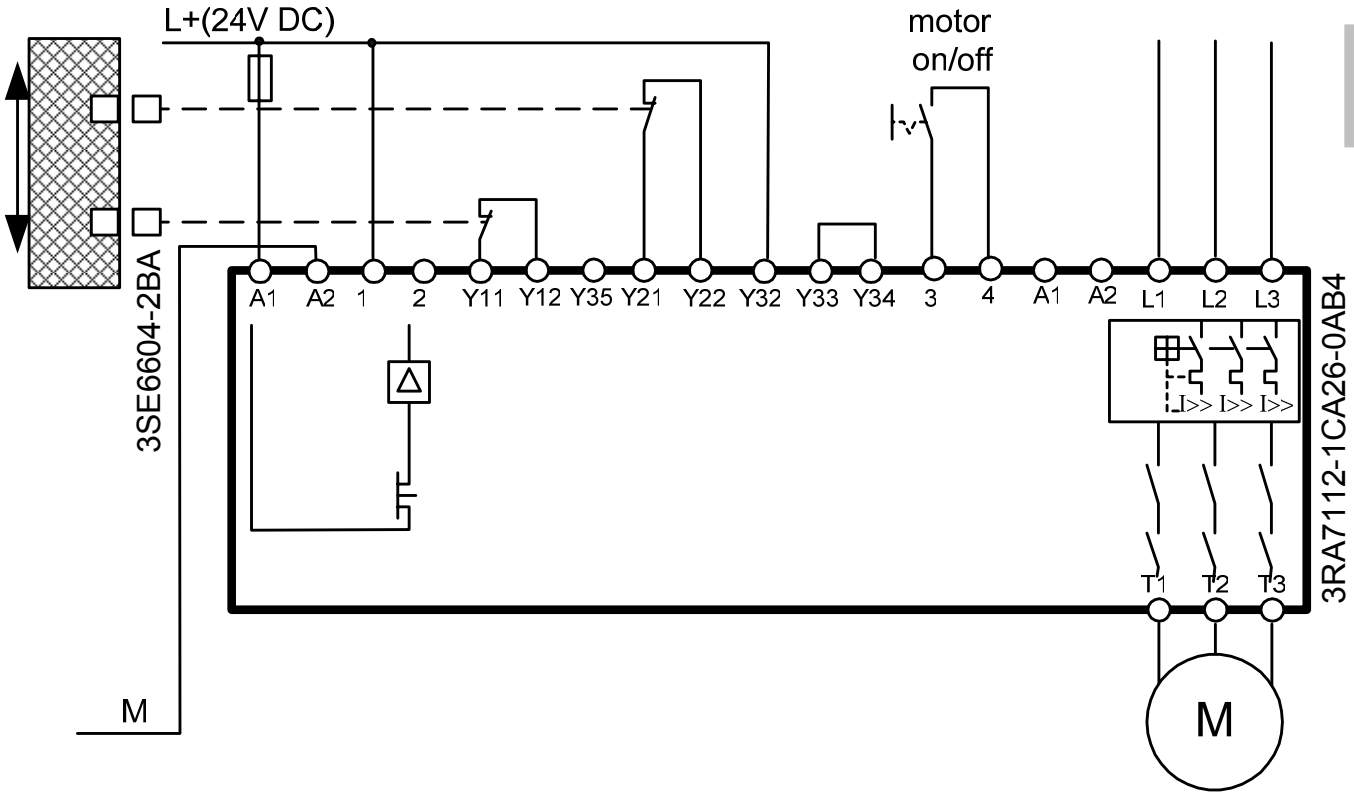


Sensor cables must be routed so that they are protected; only safety-relevant sensors with positively-opening contacts may be used as sensors.

| | | |
|---|---|---|
| **3RA711** | **Category 3** (acc. EN 954-1)<br>**Safety mat Monitoring**<br>**Stop-Category 0** | **3NO 1NO$_{el}$**<br>**$V_s$ 24 V DC**<br>**auto start** |

**Signaling using SIRIUS accessories**

5

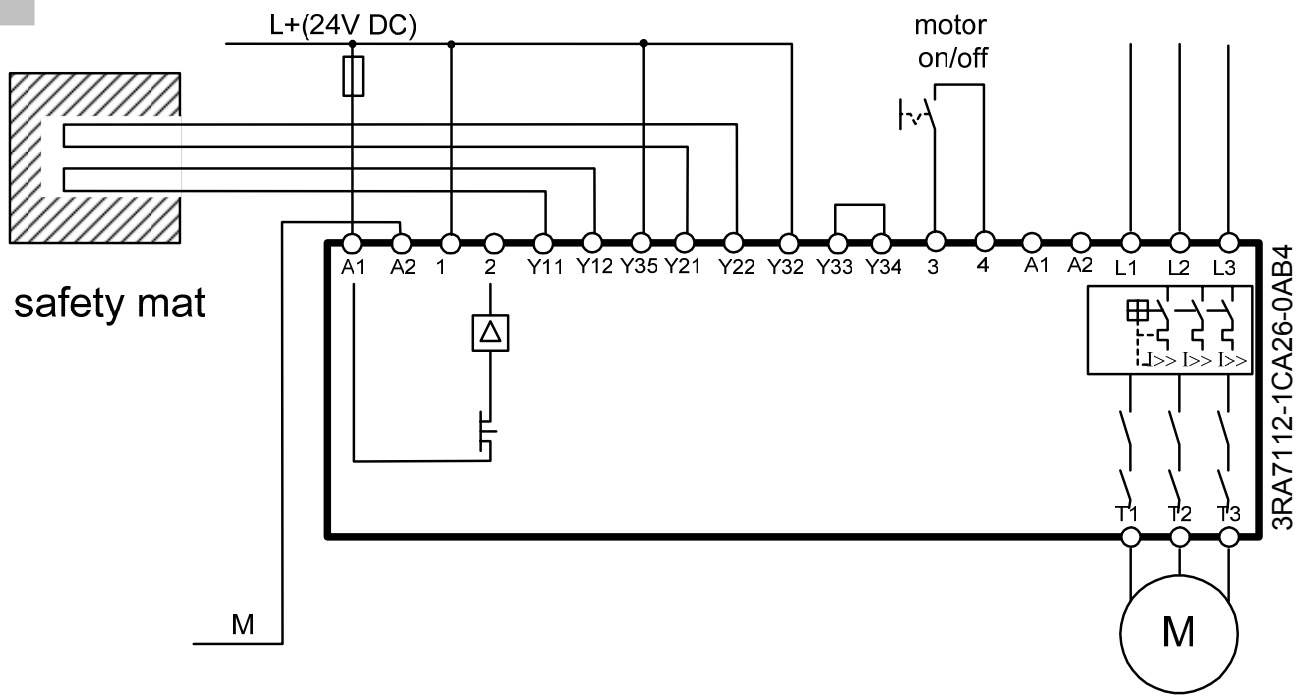


Category 3 according to EN 954-1 of this circuit is as a result of the safety mat.

Sensor cables must be routed so that they are protected; only safety-relevant sensors with positively-opening contacts may be used as sensors.

| Safety relay | Function | Comments |
|---|---|---|
| **3RA711** | **Category 4** (acc. EN 954-1)<br>**Light grid Monitoring**<br>**Stop-Category 0** | **3NO 1NO$_{el}$**<br>**$V_s$ 24 V DC**<br>**auto start** |
| | **Light grid**<br>**Type 4 (EN 61496-1)** | **Signaling**<br>**using SIRIUS accessories** |

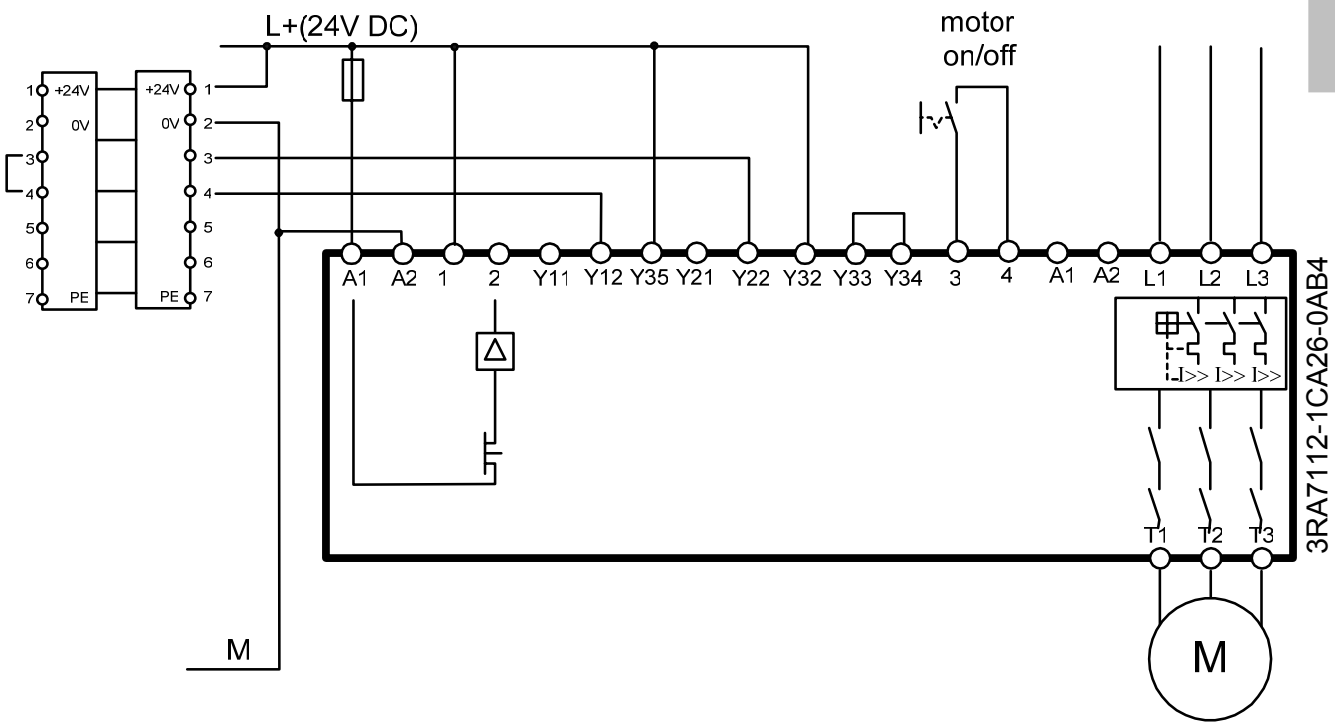


Sensor cables must be routed so that they are protected; only safety-relevant sensors with positively-opening contacts may be used as sensors.

| Safety relay | Function | Comments |
|---|---|---|
| 3RA711 + 3RA712 + 3TK2841 + 3TK2853 | Category 4 (acc. EN 954-1)<br>E-STOP Monitoring<br>Protective door Monitoring<br>Stop-Category 0 | $V_s$ 24 V DC<br>autostart<br>Signalling using SIRIUS accessories |

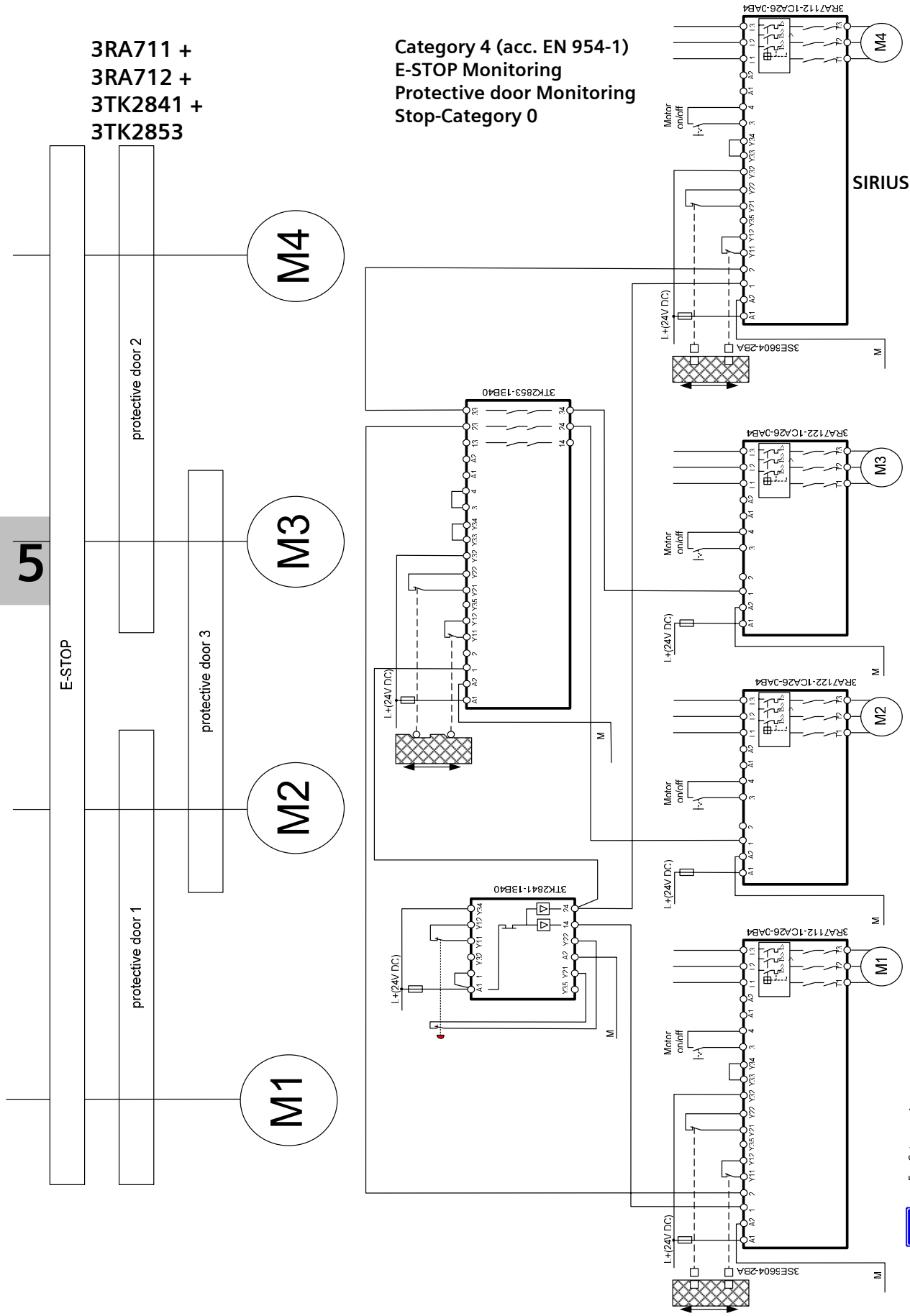


For Category 4,
several EMERGENCY STOP commanding devices may be connected in series.
it is not permissible to connect several position switches in series to implement a protective door monitoring function (due to an inadequate level of fault detection)

Sensor cables must be routed so that they are protected; only safety relevant sensors with positively opening contacts may be used as sensors.

# ANNEX

## Categories acc. to EN 954-1

For safety-relevant parts and components of control systems, potential risks are evaluated that are classified in Categories B and 1 to 4 acc. to EN 954-1.This classification should not be considered a hierarchic classification!

A simplified representation can be considered as follows:

| | Brief summary of the requirements | System behavior | Principle |
|---|---|---|---|
| **4** | Requirements of B must be fulfilled; a **single fault** must be detected before or **at the next demand** upon the safety function. | When faults occur, the safety function is always performed; **the faults are detected in time** to prevent the loss of the safety function. | Mainly characterized by the **structure of the control** |
| **3** | Requirements of B must be fulfilled, a **single fault** may not lead to the loss of the safety function; single faults must be detected | The safety function is always performed when **single faults** occur | |
| **2** | Requirements of B must be fulfilled; the safety function shall be **checked, additionally** at suitable time intervals. | The occurrence of a fault can lead to the loss of the safety function between the **checks**. | |
| **1** | Requirements of B must be fulfilled; **well-proven** components and safety principles shall be used. | The same system behavior as B, however with a **higher** safety-relevant **reliability** | Mainly characterized by the **selection of components** |
| **B** | The control must be designed so that it can withstand the **expected influences** | The occurrence of one fault can lead to the **loss of the safety function** | |

A

## The categories are not hierarchic

EN 954-1

A risk analysis determines the danger and the resulting hazard. This hazard represents a risk for man, machine and the environment. This risk can be reduced to a residual risk (minimized) by applying suitable measures. The residual risk that can be tolerated requires, among others, external measures (e.g. a protective fence) and an appropriate Category for the safety-relevant parts of the control system!

**Example:**
There is a hazard, e.g. as a result of a robot (in a machining cell), that could injure a person if he or she enters the hazardous zone (this could also result in death). There are two possible solutions:

**Protective measure A:** A protective fence without protective door (and without any other possibility of accessing the hazardous zone) is erected around the cell with the robot. This prevents access to this hazardous zone. This means that there is an extremely low residual risk: This corresponds to Category 1. However, the disadvantage of this solution is that it takes considerable effort to enter the cell with the robot (e.g. when carrying-out maintenance work).

**Protective measure B:** A protective fence with a protective door (this being the only access possibility) is erected around the robot cell. When the protective door is opened, the robot is brought into a safe condition.

This means that the residual risk corresponds to Category 3; this is because the operator may not be injured if he wishes to regularly enter the cell with the robot.

## The increase of the degree of safety using additional measures – e.g. by over-dimensioning the load contactors – does not result in a higher Category!

EN 954-1

**This does not result in a fault exclusion!**

A

# Category 1 acc. EN 954-1

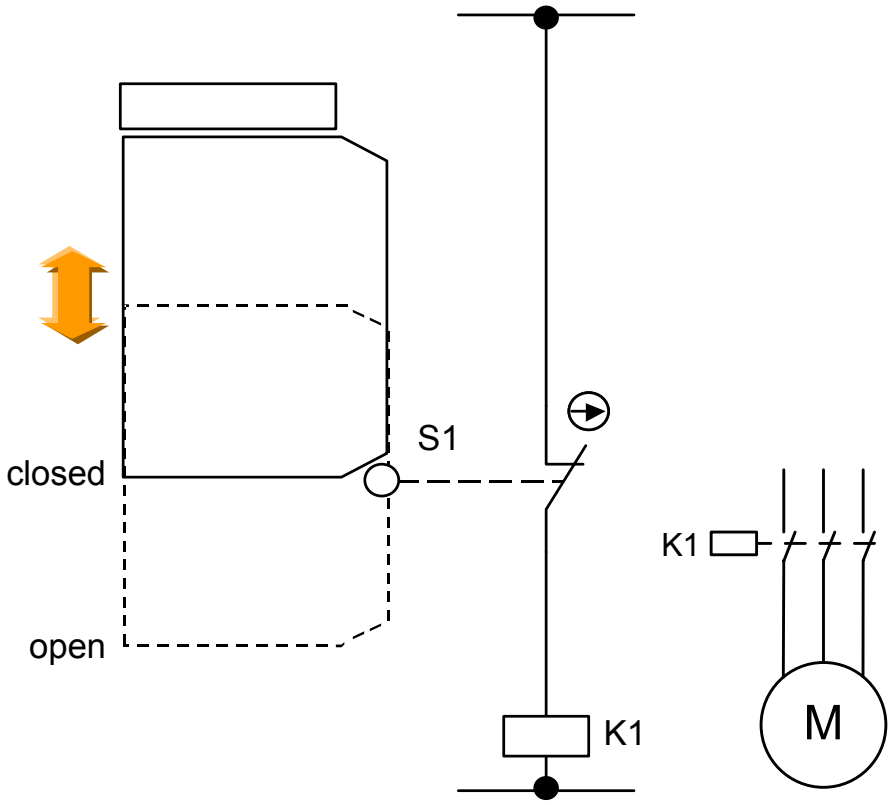


A

# Category 2 acc. EN 954-1

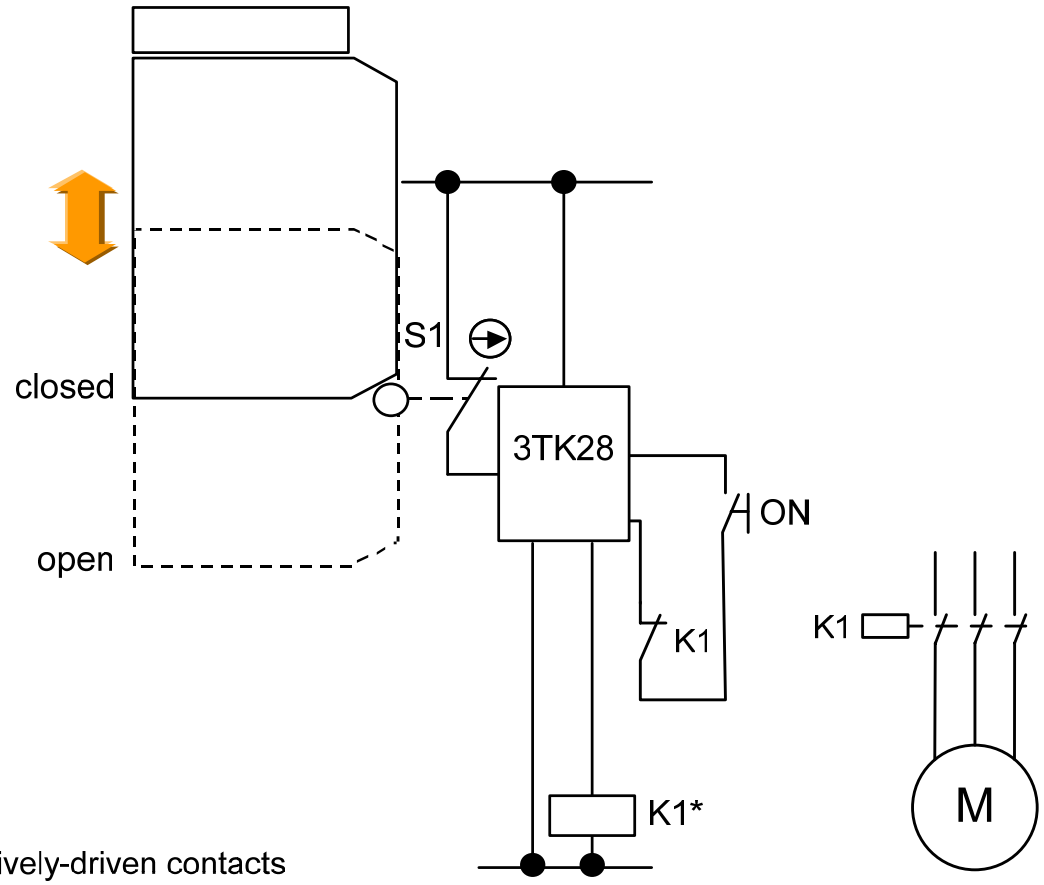


* positively-driven contacts

A

## Category 3 acc. EN 954-1

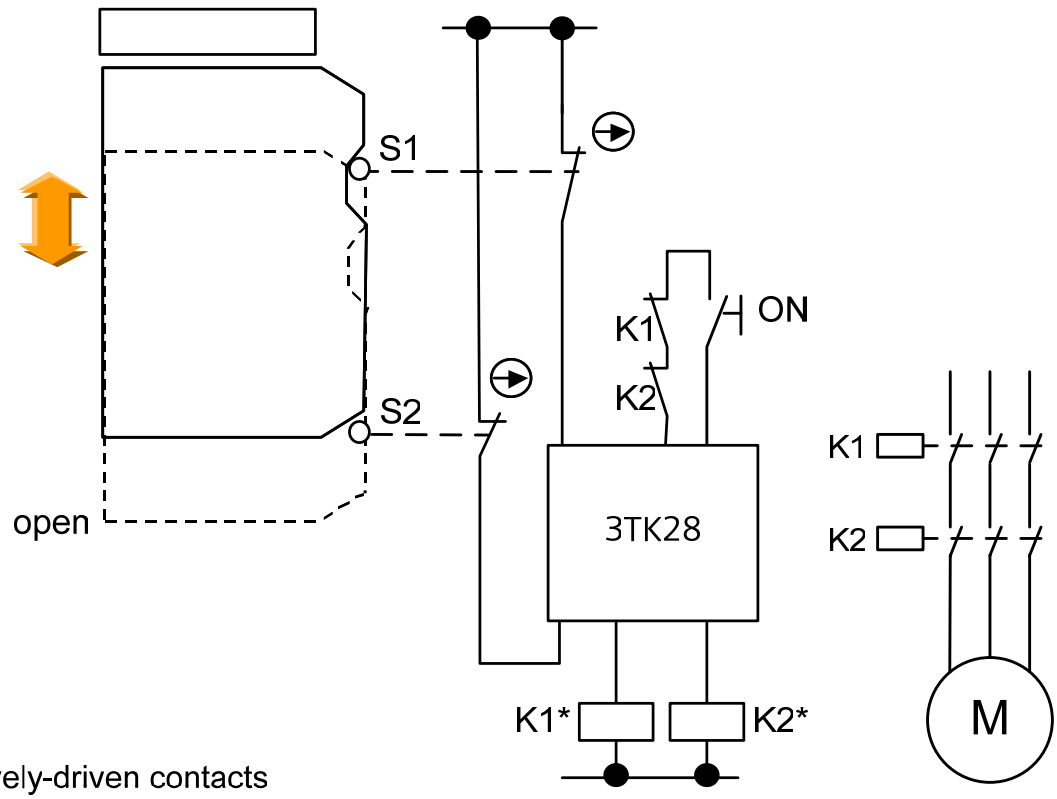


* positively-driven contacts

A

# Category 4 acc. EN 954-1

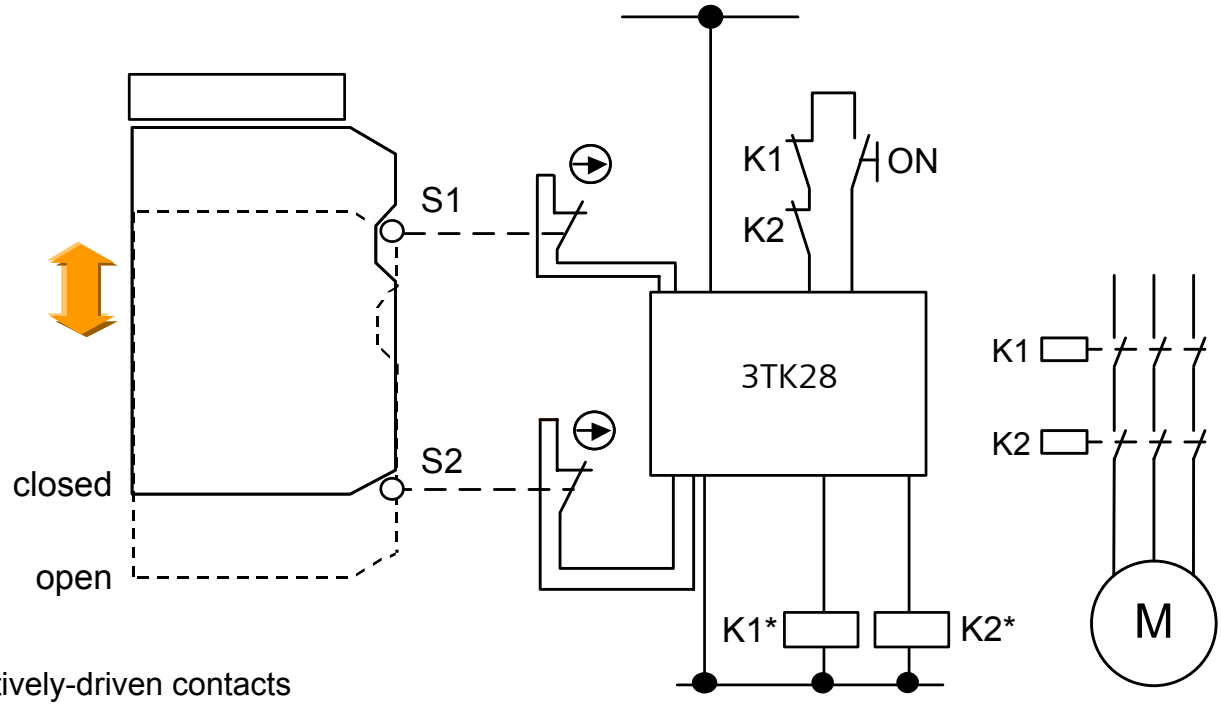


* positively-driven contacts

A

# Serial connection up to category 4

**E-STOP command element**

**EN 954-1**
**ISO 12100-1 (EN 292-1)**

EMERGENCY STOP command devices may always be connected in series: It can be excluded that the EMERGENCY STOP devices fail and are simultaneously actuated.

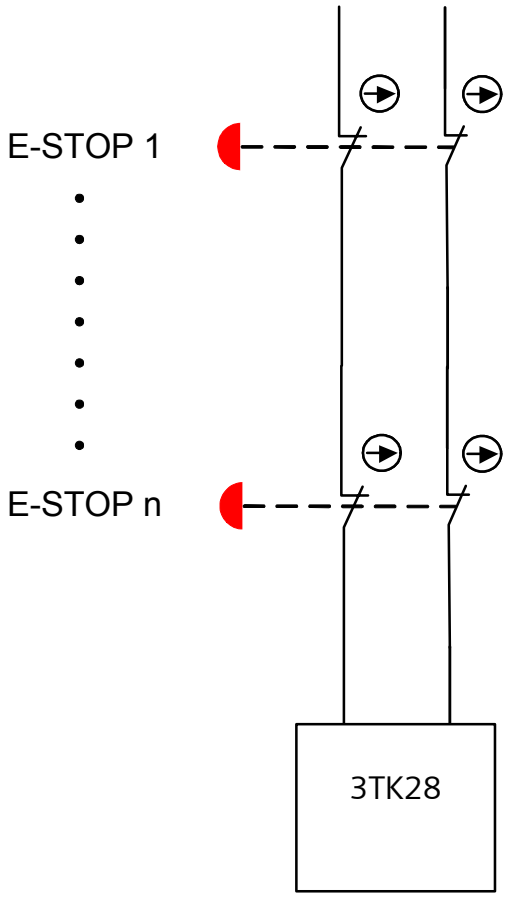


A

# Serial connection up to category 3

**Protective door monitoring**

**EN 954-1**
**ISO 12100-1 (EN 292-1)**

Position switches may be connected in series if several protective doors are not regularly and simultaneously opened (as otherwise faults cannot be detected).

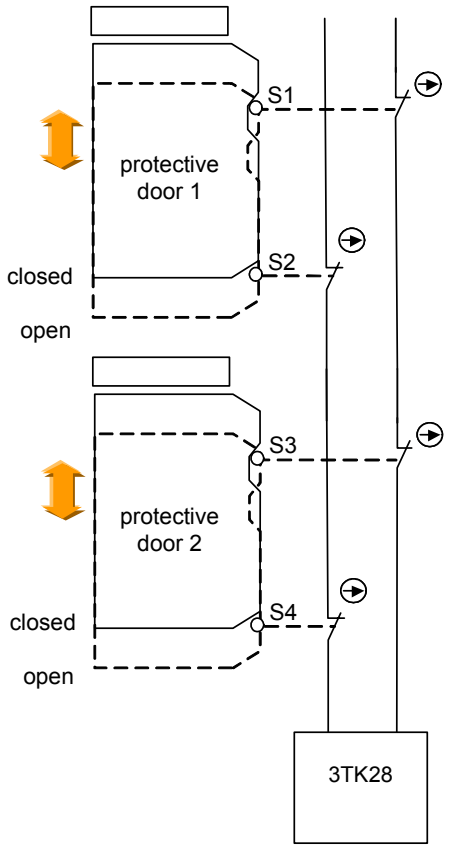


For Category 4, it is not permissible to connect several position switches in series to implement a protective door monitoring function (due to an inadequate level of fault detection).

A

# Serial connection up to category 3

**E-Stop command element and protective door monitoring**

**EN 954-1**
**ISO 12100-1 (EN 292-1)**

E-Stop command elements and position switches may be connected in series if several protective doors are not regularly and simultaneously opened and E-Stop is actuated (as otherwise faults cannot be detected).

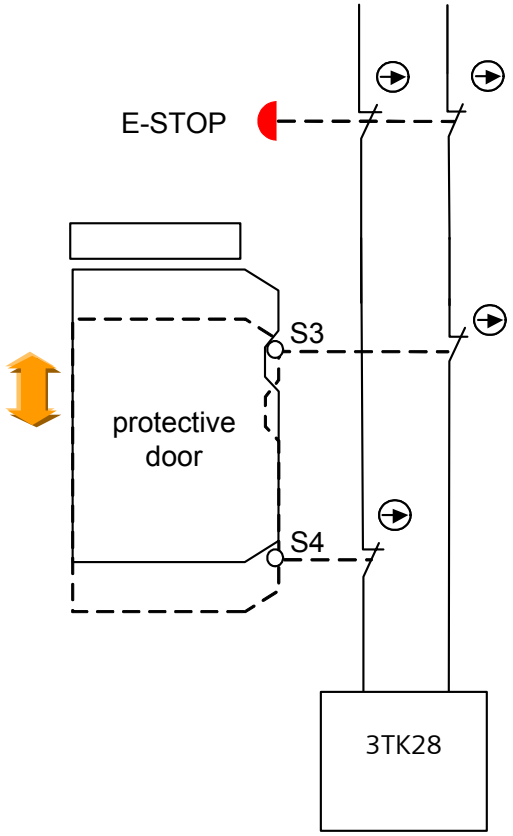


For Category 4, it is not permissible to connect several position switches and E-Stop command elements in series to implement a protective door monitoring function (due to an inadequate level of fault detection).

## Manual start, monitored start and auto start

**This is possible with the various safety relays.**

**EN 954-1**

A safety relay can be manually monitored or automatically started.

For a **manual** or **monitored** start, when pressing the ON button – after checking the input image and after a positive test of the safety relay, an enable signal is generated. This function is also designated as static operation and is specified for EMERGENCY STOP devices (EN 60204-1, conscious action).
Contrary to a manual start, the monitored start evaluates a signal change of the ON button. This means that the actuation of the ON button cannot be tampered/ manipulated with.

For an **automatic start**, without a manual agreement, but after the input image has been checked and a positive test of the safety relay, an enable signal is generated.
This function is also designated as dynamic operation and is not permissible for EMERGENCY STOP devices.
Protective devices that cannot be entered but mechanically isolate (e.g. guard) operate with an automatic start.

***Comment: A manual start can be implemented with a safety relay with automatic start, if, in the feedback circuit, in addition to the positively-opening contacts of the load contactors, an ON button is additionally connected in series.***

## Manual start is possible up to Category 3.

**This is possible with safety relays with automatic start.**

**EN 954-1**

A

A manual start is permissible for an EMERGENCY STOP device up to Category 3 according to EN 954-1 (ISO 13849-1).

## Monitored start is necessary from Category 4.

**This is possible with safety relays with monitored start**

**EN 954-1**

For Category 4 according to EN 954-1 (ISO 13849-1), a monitored start is necessary for an EMERGENCY STOP device: An unexpected start must be completely excluded.

## Safety-relevant (protected) routing, safe separation

**IEC 61140-1**
**EN 50187**

The objective is to achieve a high degree of operational safety.
In order to protect against parasitic (vagabond) voltages, the different voltages in a cable or piece of equipment must be insulated with respect to the highest voltage present
(protection against electric shock, IEC 61140):
→ cable insulation between cables/conductors at different potentials;
→ AS-i modules must fulfill, between AS-i interface and $V_{auxiliary}$ the requirements according to EN 50187 regarding the air and creepage distances and the voltage strength of the insulation of the relevant parts and components.

## Protective door monitoring with tumbler mechanism

**EN 954-1**
**ISO 12100-1 (EN 292-1)**
**EN 60204-1**

*Non-safety-relevant control*
of the tumbler mechanism is possible
up to Category 3

*Safety-relevant control*
of the tumbler mechanism is required
from Category 4

A

The objective of a tumbler mechanism is to maintain an isolating, protective device (e.g. guard) in the closed position.
The tumbler mechanism must be connected with the control so that
a) The isolating, protective device may only be opened if there is no motion present in the machine that is potentially hazardous,
b) The machine may only start when the isolating, protective device (e.g. guard) is closed and is interlocked.
***Comment:***

- ***Up to Category 3 according to EN 954-1 (ISO 13849-1), the tumbler mechanism does not have to be controlled in a safety-relevant fashion.***
  ***For Category 4 according to EN 954-1 (ISO 13849-1), the control must always be realized in a safety-relevant fashion.***
  ***The position monitoring of the interlocking device (solenoid) must, from Category 3 onwards, be individually monitored according to EN 954-1 (ISO 13849-1) – and may not be switched in series with the monitoring of the separate actuator (due to the poor level of fault detection).***

## One output for category 3 and 4 with two switch gears

**EN 954-1**

One safety-related output can be used in the cabinet
to actuate one or more switch gears up to category 4 according to EN 954-1
(fault due to short circuit can be excluded)

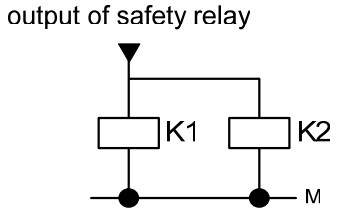

# Technical Assistance for low-voltage switchgear

**In person from Mon. - Fri. 8.00 to 17.00 (CET)**
**Telephone: +49 (911)-895-5900**
**E-Mail: technical-assistance@siemens.com**
**Internet: http://www.siemens.de/lowvoltage**

**By fax, 24 hours a day**
**Fax: +49 (911)-895-5907**

A

## Warranty, liability and support

We do not accept any liability for the information contained in this document.

Any claims against us – based on whatever legal reason - resulting from the use of the examples, information, programs, engineering and performance data etc., described in this Safety Functional Example shall be excluded. Such an exclusion shall not apply in the case of mandatory liability, e.g. under the German Product Liability Act ("Produkthaftungsgesetz") in case of intent, gross negligence, or injury of life, body or health, guarantee for the quality of a product, fraudulent concealment of a deficiency or breach of a condition which goes to the root of the contract ("wesentliche Vertragspflichten"). However, claims arising from a breach of a condition which goes to the root of the contract shall be limited to the foreseeable damage which is intrinsic to the contract , unless caused by intent or gross negligence or based on mandatory liability for injury of life, body or health. The above provisions does not imply a change in the burden of proof to your detriment.

# NOTICES

A

# Evaluation / feedback

| | |
|---|---|
| **Technical Assistance**<br>A&D CD MM1<br>D-90327 Nürnberg- Moorenbrunn<br>Fax.: +49 (911) 895-5907 | |
| From<br>Name:<br>Department<br>Location:<br>Telephone:<br>Internet address: | If you come across printing errors when reading this document, please use this form to inform us. We would also be grateful for any suggestions and recommendations for improvement. |

## Evaluation of the SIRIUS Safety Integrated Application Manual – S.I.A.M.–

Very good ❑ good ❑ poor ❑

Because:

Time saving by using the document:

No saving ❑ approx. 5% ❑ approx. 10% ❑ other.....%

**Suggestions / recommendations:**