Optocoupler module - UMK- 8 OM-R/MF/MKDS - 2972738

Please be informed that the data shown in this PDF Document is generated from our Online Catalog. Please find the complete data in the user's documentation. Our General Terms of Use for Downloads are valid
(http://phoenixcontact.com/download)

The illustration shows a version for 8 pluggable digital I/O modules, or SOLID-state relays

Interface module, with plug-in socket for 8 solid-state relays, with security latch, with screw connection, with light indicator and fuse, control logic: minus switching

Product Features

- Status indicator
- Integrated fuse for line protection
- Can be fitted with solid-state relays or I/O modules

Key commercial data

Packing unit	1 pc
GTIN	4 017918 088699
Weight per Piece (excluding packing)	345.5 GRM
Custom tariff number	85369010
Country of origin	Germany

Technical data

Dimensions

Width	180 mm
Height	77 mm
Depth	72 mm

Ambient conditions

Ambient temperature (operation)	-20 °C ... 55 °C

Optocoupler module - UMK- 8 OM-R/MF/MKDS - 2972738

Technical data

Ambient conditions

Ambient temperature (storage/transport)	-20 °C ... 70 °C

Input data

Typical input current at U_N	30 mA (Optocoupler dependent)
Status display/channel	Yellow LED

Output data

Limiting continuous current	4 A (Optocoupler dependent)
Error detection (line break / short-circuit)	no

General

No. of channels	8
Compatible components	Digital I/O modules
With components	No
Standards/regulations	DIN VDE 0110b, Gr. C for 250 V DC
	DIN VDE 0160 (in relevant parts)
Mounting position	any
Assembly instructions	In rows with zero spacing
Housing insulation material	PVC, side panel PA non-reinforced,
Color	green

Connection data for connection 1

Connection name	Input
Number of connections	2
Connection method	Screw connection
Number of positions	12
Conductor cross section stranded min.	0.2 mm²
Conductor cross section stranded max.	2.5 mm²
Conductor cross section solid min.	0.2 mm²
Conductor cross section solid max.	4 mm²
Conductor cross section AWG/kcmil min.	24
Conductor cross section AWG/kcmil max	12
Screw thread	M3
Stripping length	8 mm

Classifications

eCl@ss

eCl@ss 4.0	27371102

Optocoupler module - UMK- 8 OM-R/MF/MKDS - 2972738

Classifications

eCl@ss

eCl@ss 4.1	27371102
eCl@ss 5.0	27371001
eCl@ss 5.1	27371001
eCl@ss 6.0	27371001
eCl@ss 7.0	27371001
eCl@ss 8.0	27371001

ETIM

ETIM 2.0	EC001504
ETIM 3.0	EC001504
ETIM 4.0	EC001504
ETIM 5.0	EC001504

UNSPSC

UNSPSC 6.01	30211916
UNSPSC 7.0901	39121542
UNSPSC 11	39121542
UNSPSC 12.01	39121542
UNSPSC 13.2	39121542

Approvals

Approvals

Approvals

UL Recognized / cUL Recognized / GOST / cULus Recognized

Ex Approvals

Approvals submitted

Approval details

UL Recognized

Optocoupler module - UMK- 8 OM-R/MF/MKDS - 2972738

Approvals

cUL Recognized

GOST

cULus Recognized

Drawings

Dimensioned drawing

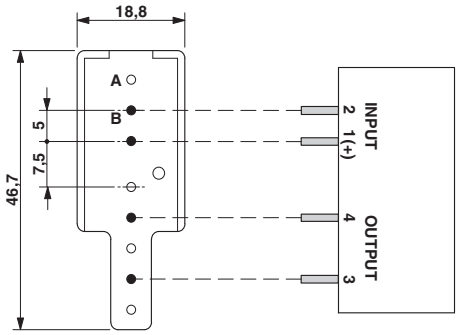

A = without metal
B = with metal

Optocoupler module - UMK- 8 OM-R/MF/MKDS - 2972738

Circuit diagram

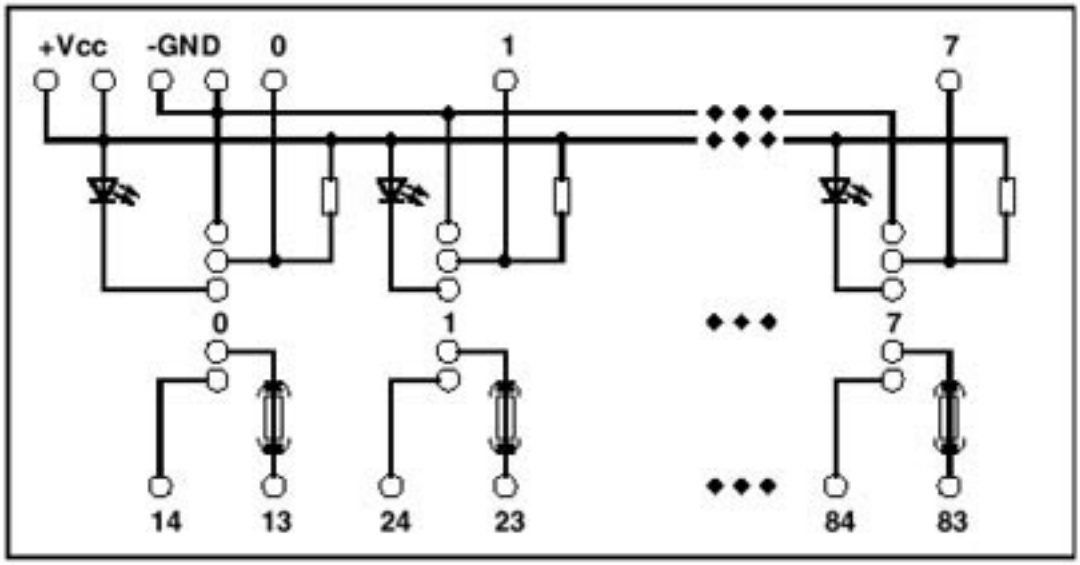

Control logic: Minus switching

Phoenix Contact 2014 © - all rights reserved
http://www.phoenixcontact.com