SIDES	BOTTOM

1 PCS 3/8-16×2 Screws Installed

1 PCS 3/8-16 Nut Installed

Material:Steel-Malleable Lron 32510 Sandblast

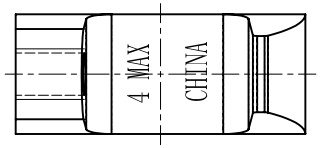

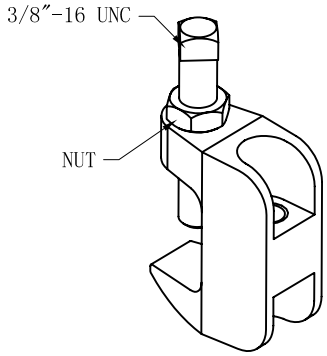

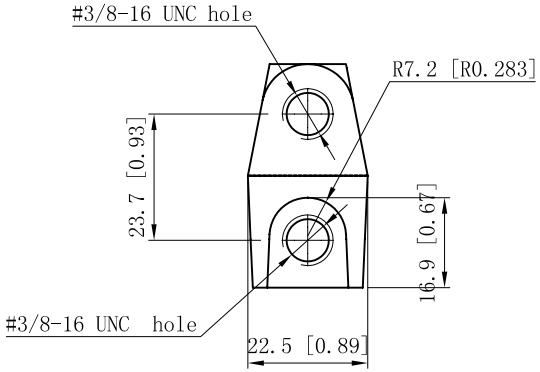

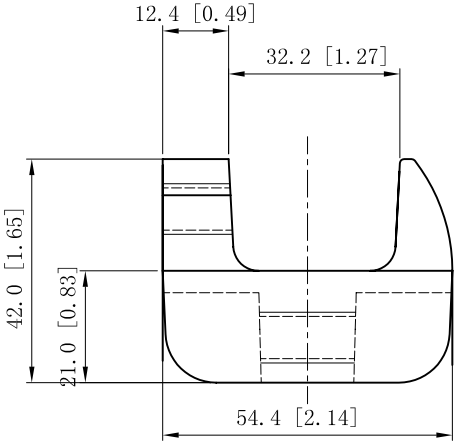

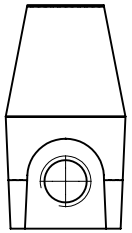

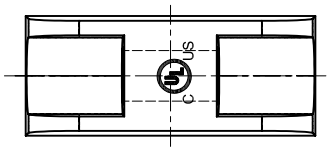

DESCRIPTION

TRADE REFERENCE TERMS

This data sheet is for reference only .GARVIN INDUSTRIES reserves the right to make changes to the design without prior notice.

STANDARD PACKING	GARVIN INDUSTRIES		
25/250 PCS	TITLE: PIPE-FITTERS TOP BEAM CLAMP		
	SIZE: A4	DWG NO.: MFC-3816	REV: A
	DATA SHEET		